REV.	ECN NO.	DATE	SIGN	DESCRIPTION
A	Initial Release	2014/06/28	Tom_gu	Change Rev.1 To Rev.A
B	C230765	2023/08/10	Alex	△B*2

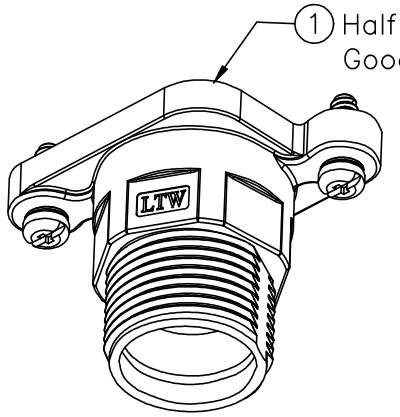

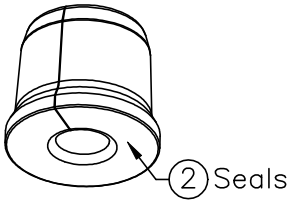

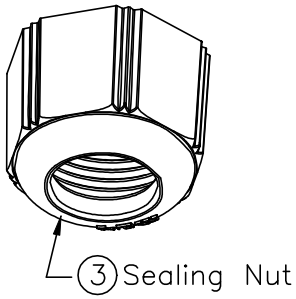

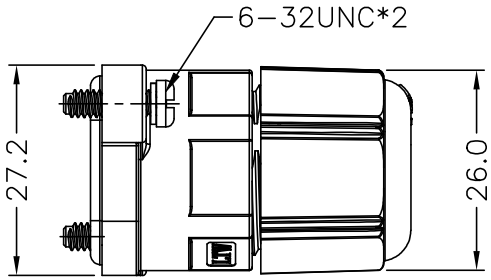

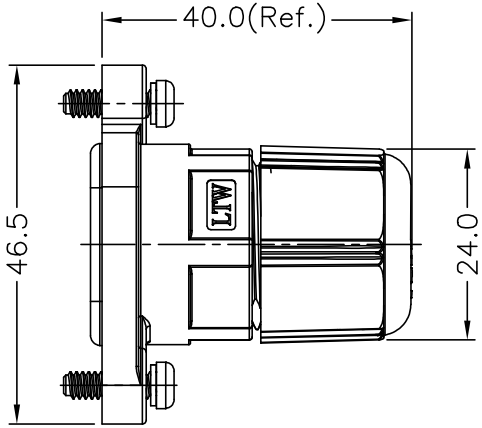

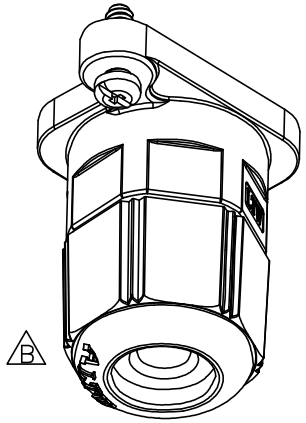

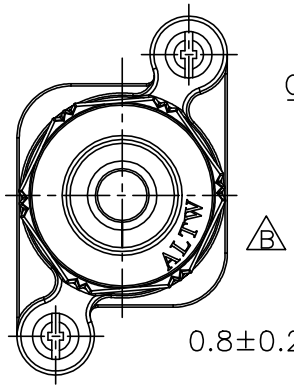

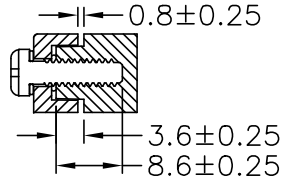

Condition 1

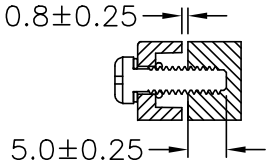

Condition 2

兩螺絲孔無防水功能(需挖盲孔)
(Please See the Condition 1 & 2)
6-32UNC*2

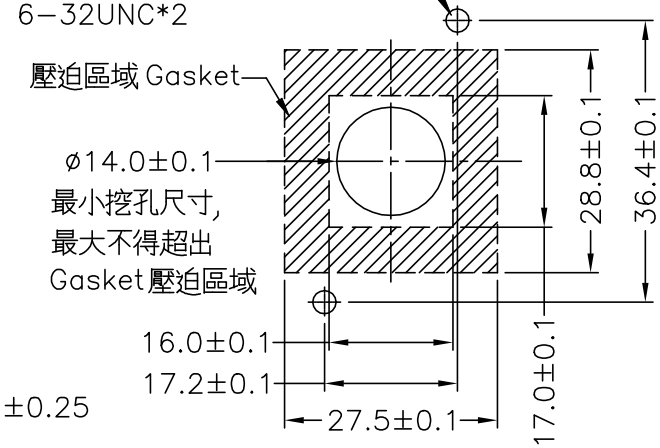

Recommended Panel Cut-Out

Note:
* Waterproof Rate:IP67.
* Cable OD:ø7.8~ø9.3mm.
* Tempertaure Rating:-40°C~+85°C.
* Gasket. Seals:Silicone,Gray.
* O-ring:Silicone,Gray.
* Body & Sealing Nut:ZDC-3,Nickel Plated 120u".
* Screw & Washer:Stainless Steel.
* Sealing Nut Torque:12~16 kgf.cm
* 螺絲與對插板對鎖後,對插板距本體之均勻距離 0.8mm 為達到 IP67 防水狀態
* ①②③組裝後放入一個 PE 袋 (Sealing Nut鎖 2~3 牙即可)

UNIT:mm	TITLE: RJ Ass'y (OD7.8~9.3mm) (After Plug In)	Amphenol LTW 安費諾亮泰企業股份有限公司	ITEM NO: CSF-D14004	DRAWN BY: Tom	DATE: 2014/06/28
TOLERANCE: ±0.5 mm	SCALE: Free / SHEET: 1 OF 1		DWG NO: CSF-D14004	CHECKED BY: Ludi	DATE: 2014/06/28
	REV.: B / SIZE: A4 / QC :Inspection Item		CUSTOMER: ALTW	APPROVED BY: Victor	DATE: 2014/06/28

THIS DOCUMENT IS SUBJECT TO CHANGE WITHOUT NOTICE. IT IS CONFIDENTIAL AND A PROPERTY OF Amphenol LTW. DISCLOSURE TO THIRD PARTY HAS TO BE AUTHORIZED BY Amphenol LTW.