REV.	ECN NO.	DATE	SIGN	DESCRIPTION
B	C190315	2019/03/19	Ruru	Modify Note & Add QC Dimension
C	C240598	2024/05/29	Ruru	△C X3
D	C250432	2025/03/31	Ruru	△D X1

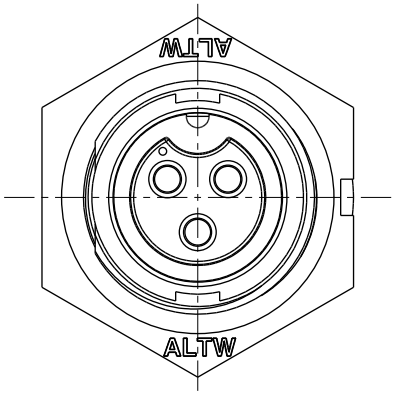

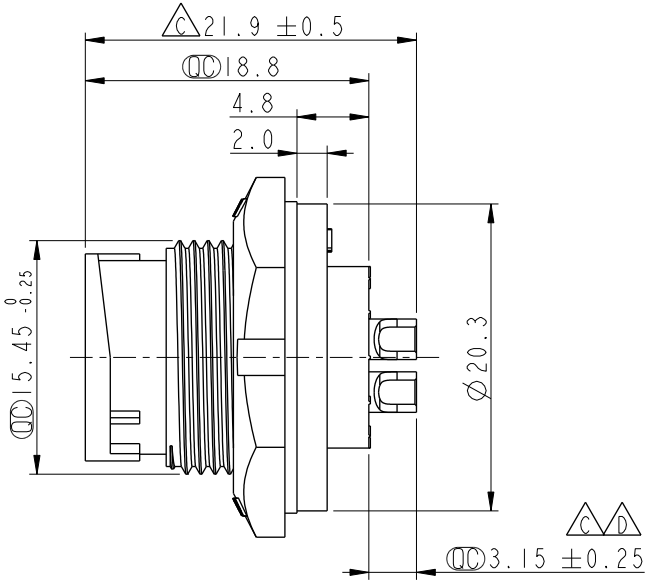

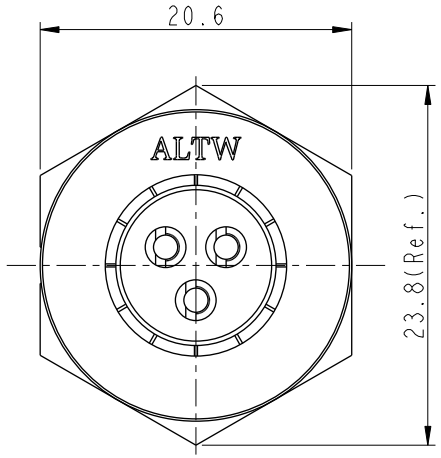

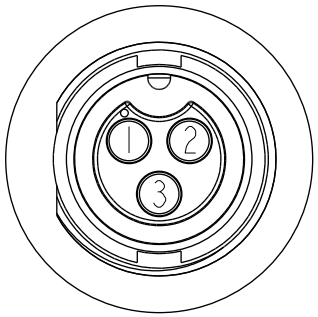

Pin Assignments
Front View

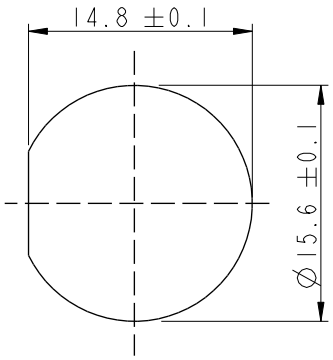

Recommended Panel
Cut-Out

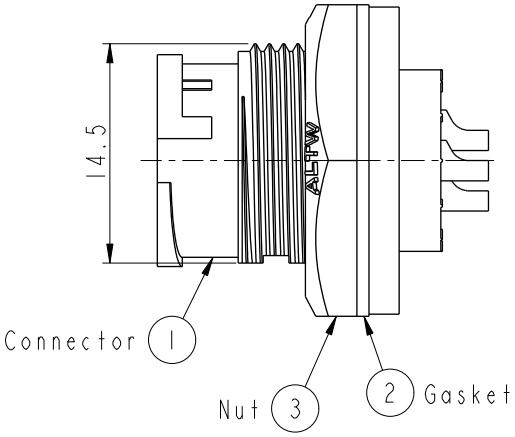

Note: △B
* QC Important Dimension
* Waterproof Rate: IP67, Unmated
* Housing: Thermoplastic, Black
* Pin: Copper Alloy, Gold Plated
* Nut: Thermoplastic, Black
* Gasket: Rubber, Gray
* Use with waterproof cap or dust cap
  Maximum Panel Thickness: 2.8mm
* Use without waterproof cap or dust cap
  Maximum Panel Thickness: 4.0mm
* Gasket and Nut are packed separately
  in PE bags

UNIT: mm

TOLERANCE
.X ±0.25
.XX ±0.1
.XXX ±0.05
ANGLES ±1°

TITLE: N CERES, ME, B-10A, 03P, FRONT FASTENED M, F, SOLDER, 2LOCK △C

SCALE	SIZE	SHEET
2:1	A4	1 OF 1
REV. D	WC-REV. A.3	QC: Inspection item

Amphenol LTW
安費諾亮泰企業股份有限公司

ITEM NO	DRAWN BY	DATE
IBB-03PMFS-LC7001	Ruru	2025-03-31
DWG NO: IBB-03PMFS-LC7001	CHECKED BY: Rita	DATE: 2025-03-31
CUSTOMER: ALTW	APPROVED BY: Fred	DATE: 2025-03-31

WI0814-03-RW01A2

THIS DOCUMENT IS SUBJECT TO CHANGE WITHOUT NOTICE. IT IS CONFIDENTIAL AND A PROPERTY OF Amphenol LTW. DISCLOSURE TO THIRD PARTY HAS TO BE AUTHORIZED BY Amphenol LTW.