REV.	ECN NO.	DATE	SIGN	DESCRIPTION
B	LEN-8B0253	2008/10/03	Shin	Add Note
C	C190269	2019/02/26	Ruru	Modify Note & Change Logo

ALTW
CONFIDENTIAL
2019-02-26
R&D DEPT.

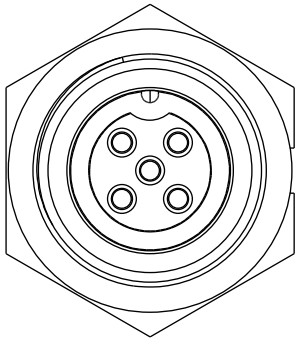

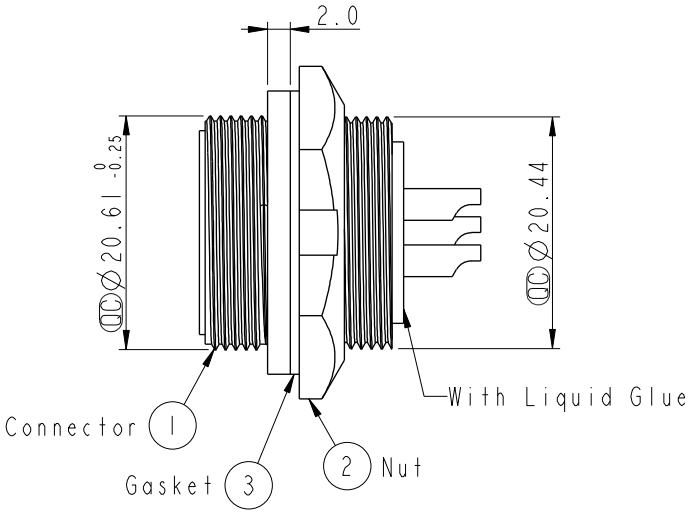

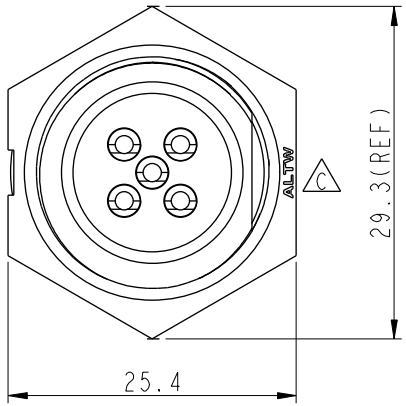

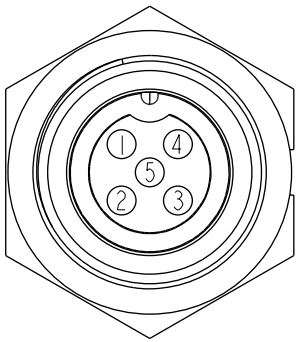

Pin Assignments
Front View

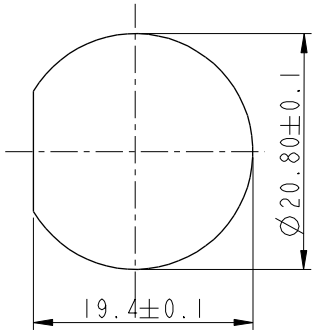

Recommernded Panel Cut-Out

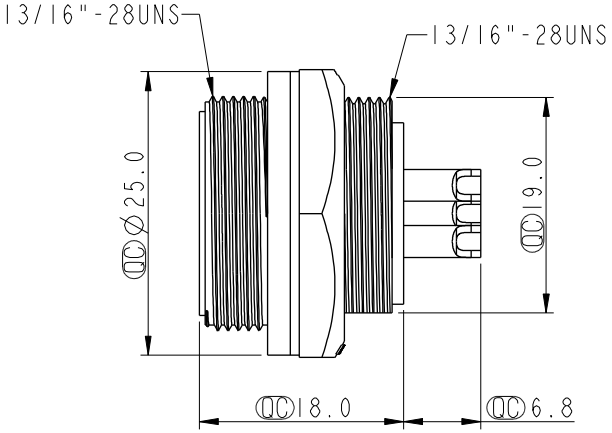

Note: C
* QC Improtant Dimension To Check.
* Waterproof Rate: IP67, Unmated
* Housing: Thermoplastic, Black
* Pin: Copper Alloy, Gold Plated
* Nut: Thermoplastic, Black
* Gasket: Rubber, Black
B * Use with waterproof cap or dust cap
  Maximum Panel Thickness: 3.0mm
B * Use without waterproof cap or dust cap
  Maximum Panel Thickness: 4.0mm
* Gasket and Nut are packed separately in PE bags.

UNIT: mm

TOLERANCE
.X ±0.25
.XX ±0.1
.XXX ±0.05
ANGLES ±1°

TITLE: Middle, Panel Screw 5Pin M Conn. F Pin			
SCALE 1:1	SIZE A4	SHEET 1 OF 1	
REV. C	WC-REV. A.2	QC: Inspection item	

Amphenol LTW
安費諾亮泰企業股份有限公司

ITEM NO CB-05RMFS-SC7001	DRAWN BY Ruru	DATE 2019-02-26
DWG NO CB-05RMFS-SC7001	CHECKED BY Rita	DATE 2019-02-26
CUSTOMER ALTW	APPROVED BY Max	DATE 2019-02-26

W10814-03-RM01A2

THIS DOCUMENT IS SUBJECT TO CHANGE WITHOUT NOTICE. IT IS CONFIDENTIAL AND A PROPERTY OF Amphenol LTW. DISCLOSURE TO THIRD PARTY HAS TO BE AUTHORIZED BY Amphenol LTW.