REV.	ECN NO.	DATE	SIGN	DESCRIPTION
B	LEN-8B0111	2008/09/25	Shin	Add Note.
C	LEN1630513	2016/03/16	Ruru	Change Logo
D	C190267	2019/02/27	Ruru	Modify Note

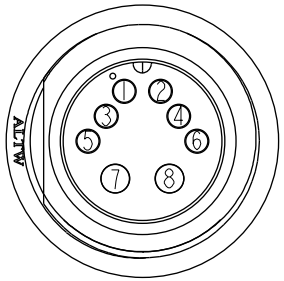

Pin Assignments
Front View

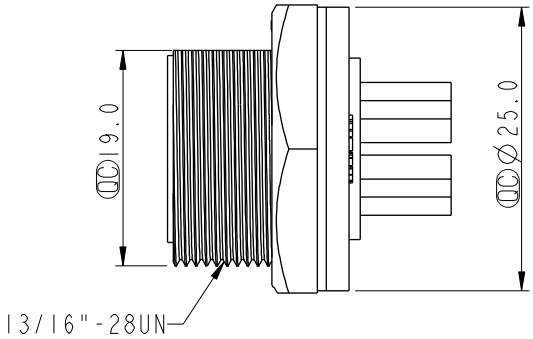

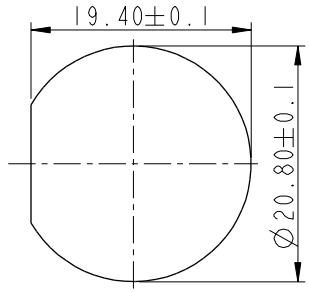

Recommended
Panel Cut-Out

ALTW
CONFIDENTIAL
2019-02-27
R&D DEPT.

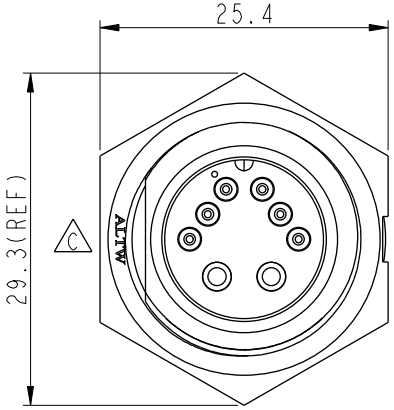

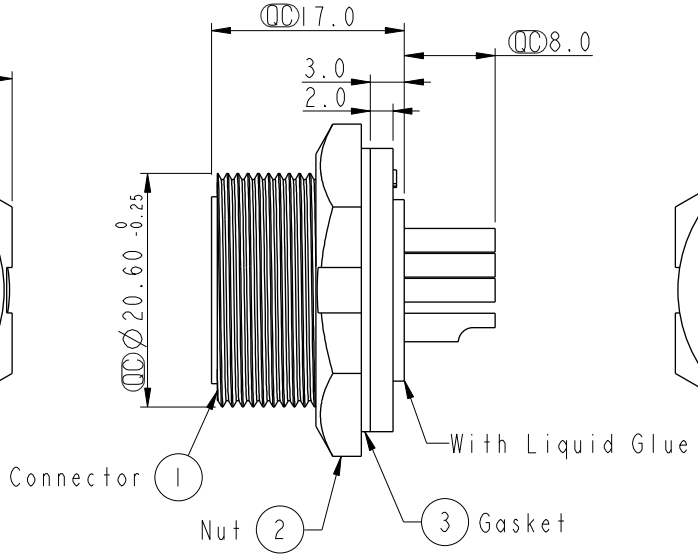

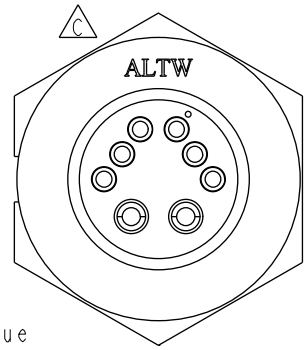

Note: D
* QC Important Dimension.
* Waterproof Rate: IP67, Unmated
* Housing: Thermoplastic, Black
* Pin: Copper Alloy, Gold Plated(10A)
* Pin: Copper Alloy, Gold Plated(5A)
* Nut: Thermoplastic, Black
* Gasket: Rubber, Black
* Liquid Glue: Clear.
B * Use with waterproof cap or dust cap
Maximum Panel Thickness:2.0mm
B * Use without waterproof cap or dust cap
Maximum Panel Thickness:3.0mm
* Gasket and Nut are packed separately in PE bags.

UNIT:mm

TOLERANCE
.X ±0.25
.XX ±0.1
.XXX ±0.05
ANGLES ±1°

TITLE: Middle,Panel Screw 8Pin M Conn M Pin			Amphenol LTW 安費諾亮泰企業股份有限公司	ITEM NO: CBD-08PMMS-SC7001	DRAWN BY: Ruru / DATE: 2019-02-27
SCALE: 1:1	SIZE: A4	SHEET: 1 OF 1		DWG NO: CBD-08PMMS-SC7001	CHECKED BY: Rita / DATE: 2019-02-27
REV.: D	WC-REV.: A.3	QC: Inspection item		CUSTOMER: ALTW	APPROVED BY: Max / DATE: 2019-02-27

W10814-03-RM01A2

THIS DOCUMENT IS SUBJECT TO CHANGE WITHOUT NOTICE. IT IS CONFIDENTIAL AND A PROPERTY OF Amphenol LTW. DISCLOSURE TO THIRD PARTY HAS TO BE AUTHORIZED BY Amphenol LTW.