REV.	ECN NO.	DATE	SIGN	DESCRIPTION
A	-	2022/09/08	Scott	Rev.03 To Rev.A

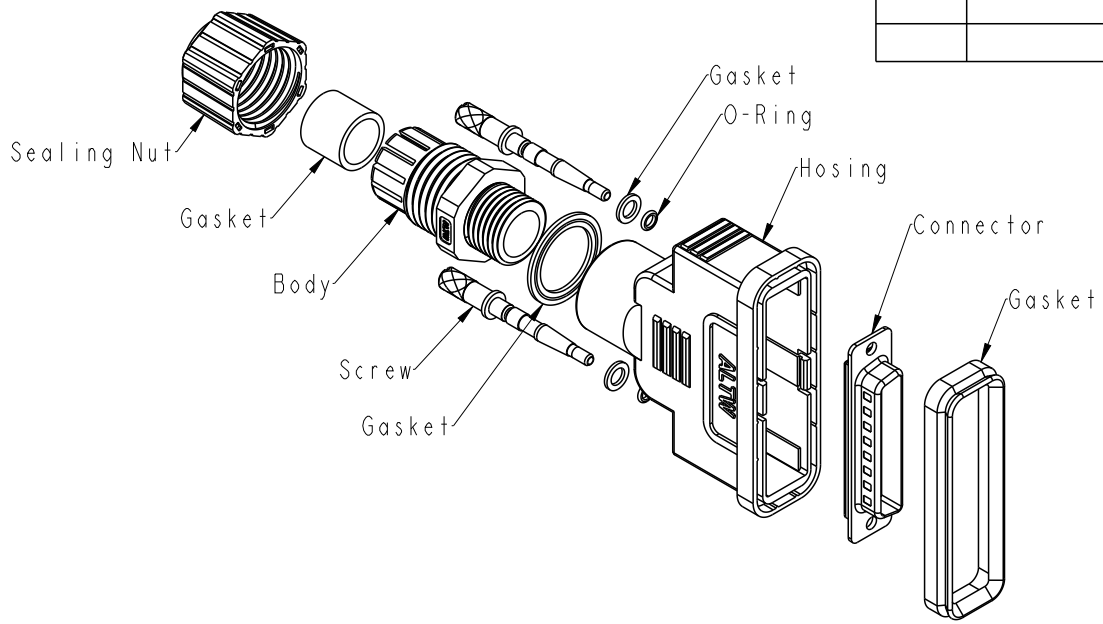

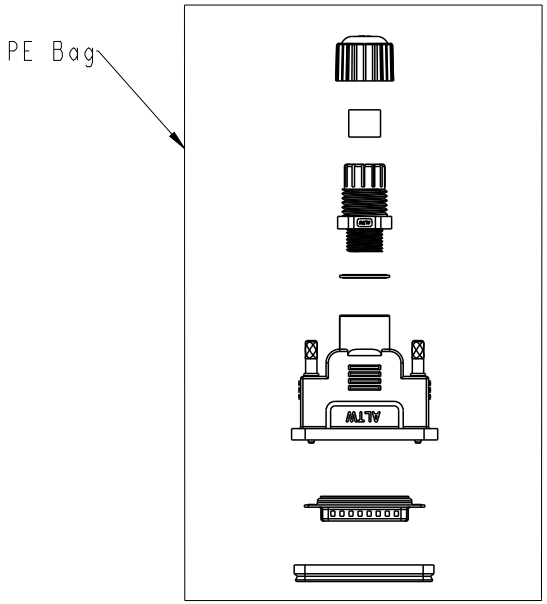

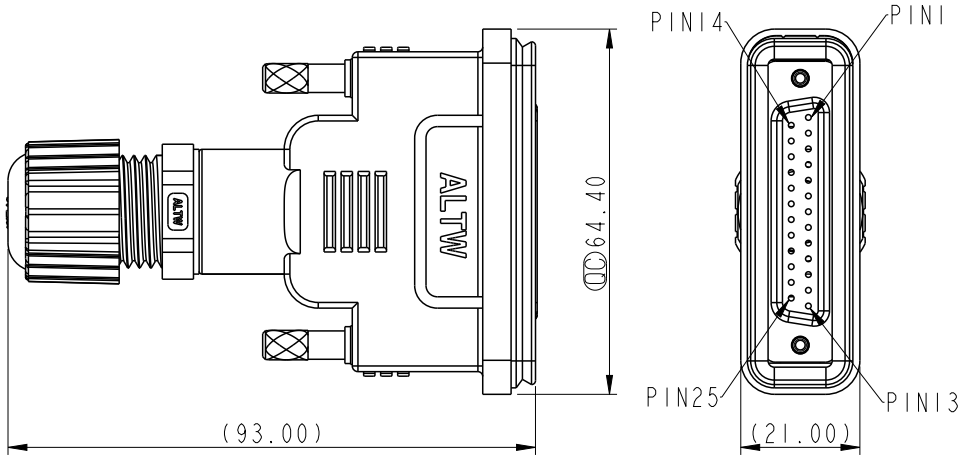

Note:
* RoHS Compliant
* QC Important Dimension
* Waterproof Rate: IPX7, Mated.
* Connector
  Housing: D-SUB, 25Pin, Male.
  Pin: Copper Alloy, Gold Plated.
  Gasket: Rubber, Black.
  Screw: Metal.
  O-Ring: Rubber, Clear.
  Seal For Cable OD: ∅6.0mm~∅10.0mm
  Clamp Ring: Termoplastic, Black.
  Seal: Rubber, Black.
  Sealing Nut: Termoplastic, Black.
* One Set Unassembled in One PE Bag.
* Pins are Purchased Separately, PN:BBA00011222

UNIT:mm	TITLE: D-SUB, DB SHLD, 25P, CABLE W/O SR M, M, CRIMP, SCREW	Amphenol LTW 安費諾亮泰企業股份有限公司	ITEM NO: SDB-25BMMC-SL7001	DRAWN BY: Scott	DATE: 2022/09/08
TOLERANCE: ±0.5 mm	SCALE: 1:1 / SIZE: A4 / SHEET 1 OF 1		DWG NO: SDB-25BMMC-SL7001	CHECKED BY: Allen	DATE: 2022/09/08
	REV.: A / WC-REV.: A.3 / QC: Inspection item		CUSTOMER: ALTW	APPROVED BY: Neo	DATE: 2022/09/08

WI0814-03-RM01A2

THIS DOCUMENT IS SUBJECT TO CHANGE WITHOUT NOTICE. IT IS CONFIDENTIAL AND A PROPERTY OF Amphenol LTW. DISCLOSURE TO THIRD PARTY HAS TO BE AUTHORIZED BY Amphenol LTW.