REV.	ECN NO.	DATE	SIGN	DESCRIPTION
C	C210219	2021/03/16	Vicky	C X5
D	C210796	2021/05/24	Vicky	D X1
E	C221890	2022/12/26	Vicky	E X1

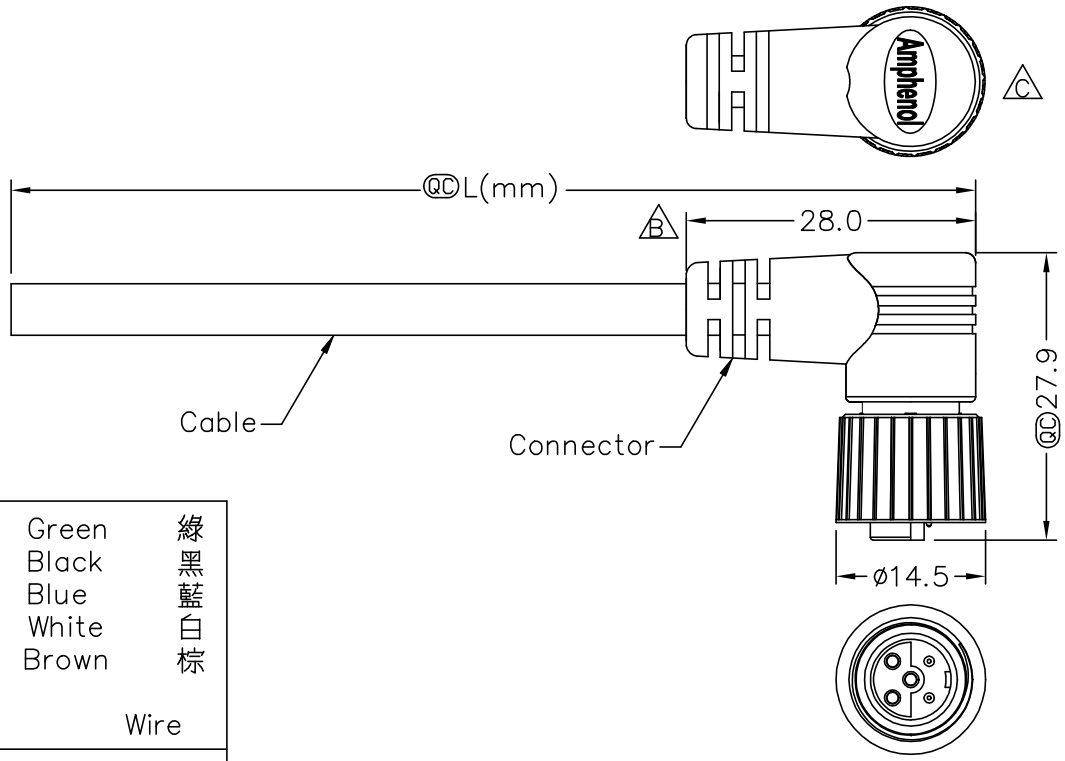

Pin Out	Pin #	Wire	
	5	Green	綠
	4	Black	黑
	3	Blue	藍
	2	White	白
	1	Brown	棕

Conn.

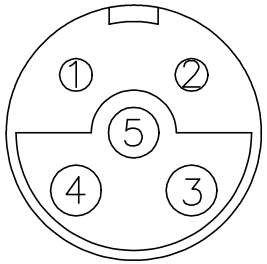

5P

Pin Assignments
Front View

C 12-XXAFIM-SR7AXX

XX: No. Of Pin

XX: 01~99Meters
01: 01Meter
02: 02Meters
:
:
99: 99Meters
Cable Length(L): 01~99Meters

C Note:
* RoHS Compliant
* QC Important dimension
E * Waterproof rate: IP67, mated
* Connector
  Housing: Thermoplastic, Black
  Pin: Copper alloy, Gold plated
  O-Ring: Rubber, Green
  Nut: Metal
  Outer mold: Thermoplastic, Black
* Cable: UL2464, 22#*5C+Talcum, OD=5.5mm,
  PVC Jacket, UV Resistant, Black
B * Cable length tolerance:
  1M: +50/−0 mm
  1M < L ≦ 3M: +100/−0 mm
  3M < L ≦ 5M: +150/−0 mm
  5M < L ≦ 10M: ±100 mm
  10M < L ≦ 20M: ±200 mm
  20M < L ≦ 30M: ±300 mm
D 30M < L ≦ 99M: ±500 mm

UNIT: mm	TITLE: O SEN, M12 A (I) B C CABLE W/SR, F, I, MOLDING	**Amphenol LTW** 安費諾亮泰企業股份有限公司	ITEM NO	DRAWN BY: Prune — DATE: 2009/01/14
TOLERANCE: ±0.5mm	SCALE: Free — SHEET 1 OF 1		DWG NO: C 12-XXAFIM-SR7AXX	CHECKED BY: Tina — DATE: 2009/01/16
	REV. E — SIZE A4	QC : Inspection Item	CUSTOMER: ALTW	APPROVED BY: Luke — DATE: 2009/03/25

THIS DOCUMENT IS SUBJECT TO CHANGE WITHOUT NOTICE. IT IS CONFIDENTIAL AND A PROPERTY OF Amphenol LTW. DISCLOSURE TO THIRD PARTY HAS TO BE AUTHORIZED BY Amphenol LTW.