REV.	ECN NO.	DATE	SIGN	DESCRIPTION
B	LEN1480591	2014/08/11	Rita	Update Logo
C	C210561	2021/04/08	Vicky	△C X4
D	C221890	2022/12/26	Vicky	△D X1

△C 12-XXBFIA-SL8001

XX: No. Of Pin

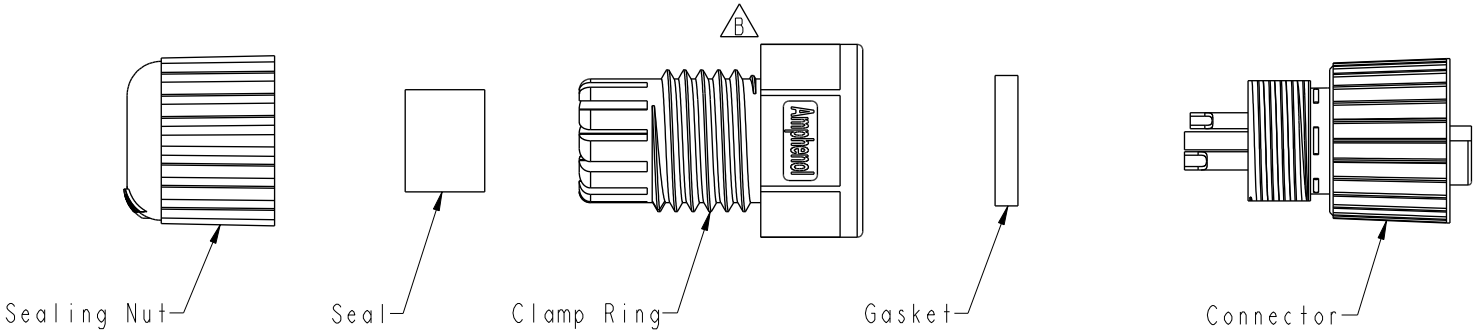

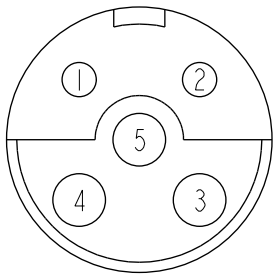

5P

Pin Assignments
Front View

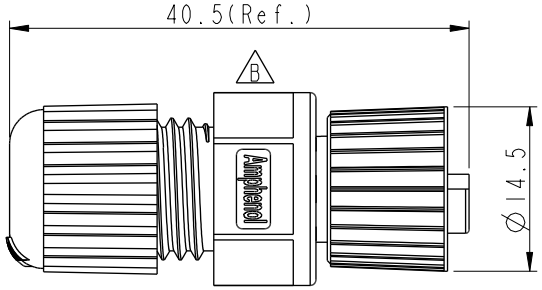

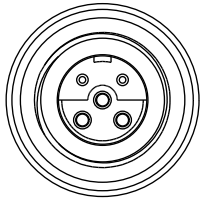

△C Note:
- * RoHS Compliant
- * (QC) Important Dimension
- △D * Waterproof rate: IP68, mated 1m/24h
- * Connector
  - Housing: Thermoplastic, Black
  - Pin: Copper alloy, Gold plated
  - Extension Nut: Thermoplastic, Black
  - Nut: Metal
  - O-Ring: Rubber, Green
- * Gasket: Rubber, Black
- * Clamp Ring: Thermoplastic, Black
- * Sealing Nut: Thermoplastic, Black
- * Seal: Rubber, Black, OD:Ø4.5mm~Ø6.5mm
- * One set unassembled in one pe bag

UNIT: mm

TOLERANCE
.X ±0.25
.XX ±0.1
.XXX ±0.05
ANGLES ±1°

TITLE: O SEN, M12 A (1) CABLE W/O SR, F, 1, F1 SOLDER △C

SCALE: 3:2 | SIZE: A4 | SHEET 1 OF 1

REV. D | WC-REV. A.4 | (QC): Inspection item

Amphenol LTW
安費諾亮泰企業股份有限公司

ITEM NO	DRAWN BY: Rita	DATE: 2014-08-11
DWG NO: △C 12-XXBFIA-SL8001	CHECKED BY: Kris	DATE: 2014-08-11
CUSTOMER: ALTW	APPROVED BY: Wenmao	DATE: 2014-08-11

THIS DOCUMENT IS SUBJECT TO CHANGE WITHOUT NOTICE. IT IS CONFIDENTIAL AND A PROPERTY OF Amphenol LTW. DISCLOSURE TO THIRD PARTY HAS TO BE AUTHORIZED BY Amphenol LTW.