REV.	ECN NO.	DATE	SIGN	DESCRIPTION
B	LEN1480592	2014/08/11	Rita	Update Logo
C	C210561	2021/04/08	Vicky	C X4
D	C221890	2022/12/26	Vicky	D X1

C 12-XXBMIA-SL8001

XX: No. Of Pin

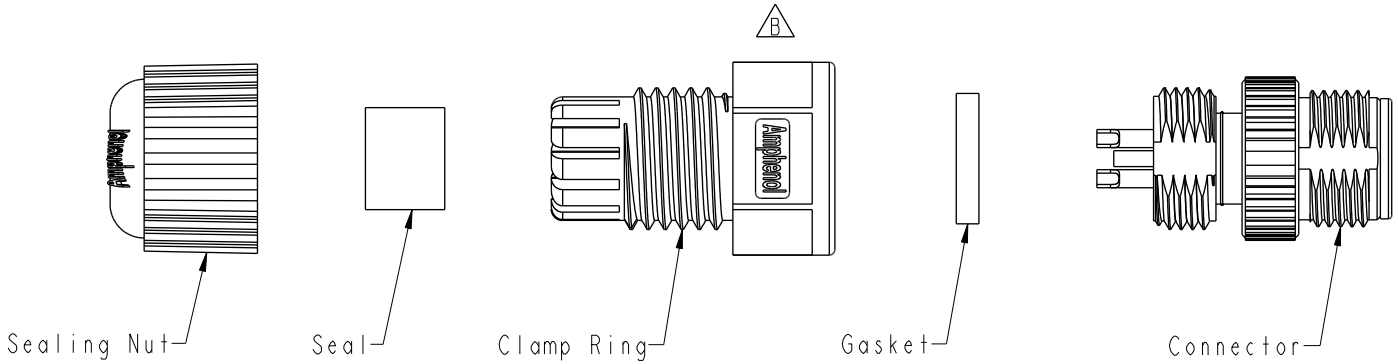

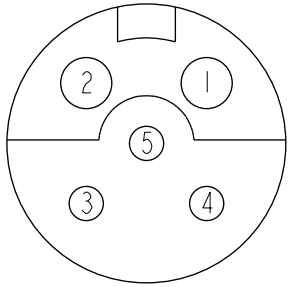

5P

Pin Assignments
Front View

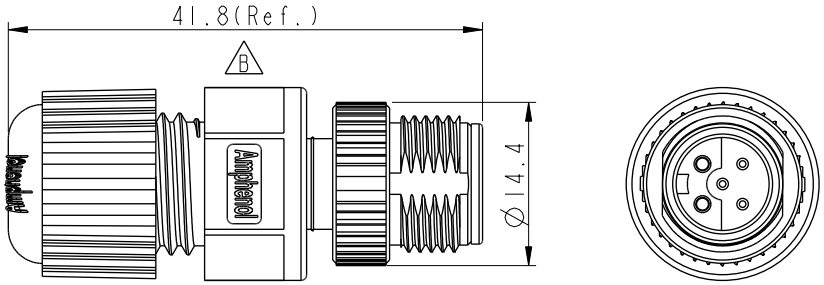

C Note:
* RoHS Compliant
* QC Important Dimension
D * Waterproof rate: IP68, mated 1m/24h
* Connector
  Housing: Thermoplastic, Black
  Pin: Copper alloy, Gold plated
  Extension Nut: Thermoplastic, Black
  Nut: Metal
* Gasket: Rubber, Black
* Clamp Ring: Thermoplastic, Black
* Sealing Nut: Thermoplastic, Black
* Seal: Rubber, Black, OD:Ø4.5mm~Ø6.5mm
* One set unassembled in one pe bag

UNIT:mm

TOLERANCE
.X ±0.25
.XX ±0.1
.XXX ±0.05
ANGLES ±1°

TITLE: O SEN, M12 A (1) CABLE W/O SR, M, 1, F1 SOLDER (C)

SCALE 2:1 | SIZE A4 | SHEET 1 OF 1

REV. D | WC-REV. A.3 | QC: Inspection item

Amphenol LTW
安費諾亮泰企業股份有限公司

ITEM NO	DRAWN BY Rita	DATE 2014-08-11
DWG NO C 12-XXBMIA-SL8001	CHECKED BY Kris	DATE 2014-08-11
CUSTOMER ALTW	APPROVED BY Wenmao	DATE 2014-08-11

FMW10702-01-02A1

THIS DOCUMENT IS SUBJECT TO CHANGE WITHOUT NOTICE. IT IS CONFIDENTIAL AND A PROPERTY OF Amphenol LTW. DISCLOSURE TO THIRD PARTY HAS TO BE AUTHORIZED BY Amphenol LTW.