REV.	ECN NO.	DATE	SIGN	DESCRIPTION
C	C210309	2021/03/12	Ruru	C X4
D	C221890	2022/12/26	Vicky	D X1
E	C231037	2023/08/07	Vicky	E X1

C
12-XXPFIP-SF8004

XX: No. Of Pin

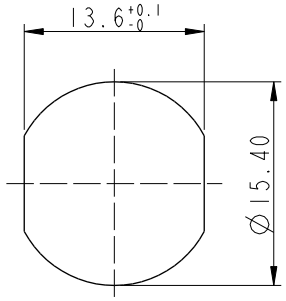

Recommended Panel Cut-Out

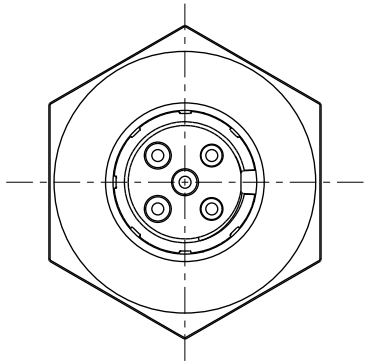

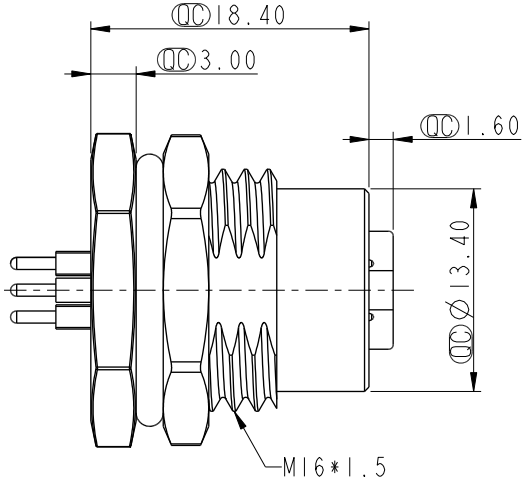

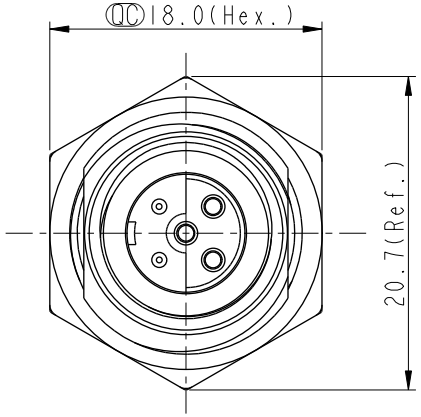

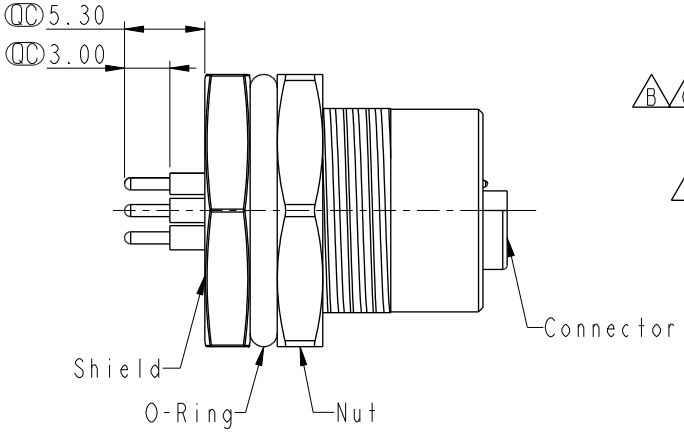

B C Note:
- RoHS Compliant
- QC Important dimension
- D Waterproof rate: IP68, unmated 1m/24h
  - E IP69K, mated
- Connector
  Housing: Thermoplastic, Black
  Pin: Copper alloy, Gold plated
  O-Ring: Rubber, Green
- Shield: Metal
- Nut: Metal
- O-Ring: Rubber, Black
- For panel thickness max: 4.5mm
- Nut is packed separately in pe bag

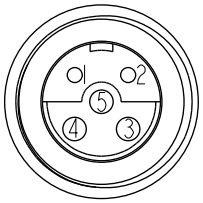

5P

Pin Assignment Front View

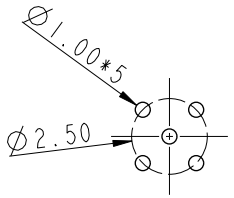

5P

PCB Layout

UNIT: mm

TOLERANCE
.X ±0.25
.XX ±0.1
.XXX ±0.05
ANGLES ±1°

TITLE: O SEN, M12 A (1) RECEPTACLE, F, 1, PCB S C			
SCALE 2:1	SIZE A4	SHEET 1 OF 1	
REV. E	WC-REV. A.3	QC: Inspection item	

Amphenol LTW
安費諾亮泰企業股份有限公司

ITEM NO	DRAWN BY SamChang	DATE 2012-08-07
DWG NO C 12-XXPFIP-SF8004	CHECKED BY Jeffrey	DATE 2012-08-28
CUSTOMER ALTW	APPROVED BY Maslow	DATE 2012-08-28

THIS DOCUMENT IS SUBJECT TO CHANGE WITHOUT NOTICE. IT IS CONFIDENTIAL AND A PROPERTY OF Amphenol LTW. DISCLOSURE TO THIRD PARTY HAS TO BE AUTHORIZED BY Amphenol LTW.