REV.	ECN NO.	DATE	SIGN	DESCRIPTION
A		2022-12-20	Zhi Cheng	Rev.01 To Rev.A
B	C240082	2024-01-18	Lavy	B *1

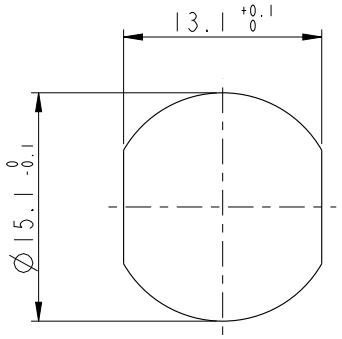

Recommended Panel Cut-Out

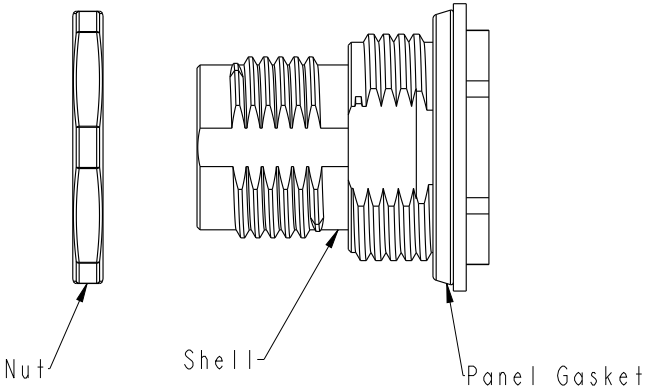

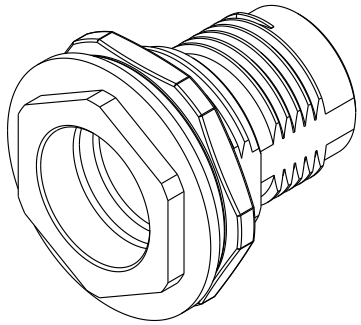

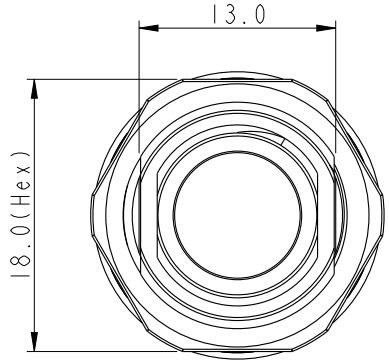

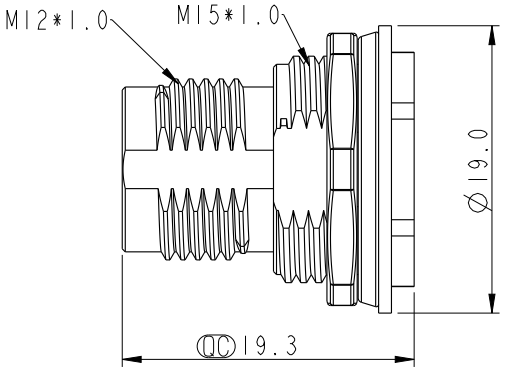

Note:
* QC Important Dimension
* Shell: Metal.
* Nut: Metal.
* Panel Gasket: Rubber, Gray.
* For Panel Thickness Max 4mm.
B * Recommended Nut Torque: 5-8kgf.cm.
* Assemble Gasket and Nut on Connector.

UNIT: mm

TOLERANCE
.X ±0.25
.XX ±0.1
.XXX ±0.05
ANGLES ±1°

TITLE	ACC, SEN, METAL		
SCALE 2:1	SIZE A4	SHEET 1 OF 1	
REV. B	WC-REV. A.5	QC: Inspection item	

Amphenol LTW
安費諾亮泰企業股份有限公司

ITEM NO APPM-AAAMA012-006	DRAWN BY Lavy	DATE 2023-01-18
DWG NO APPM-AAAMA012-006	CHECKED BY Jerry	DATE 2023-01-18
CUSTOMER ALTW	APPROVED BY Fred	DATE 2023-01-18

WI0814-03-[redacted]01A2

THIS DOCUMENT IS SUBJECT TO CHANGE WITHOUT NOTICE. IT IS CONFIDENTIAL AND A PROPERTY OF Amphenol LTW. DISCLOSURE TO THIRD PARTY HAS TO BE AUTHORIZED BY Amphenol LTW.