REV.	ECN NO.	DATE	SIGN	DESCRIPTION
A	Initial Release	2010/04/22	Jessie	Form Rev.01 To A

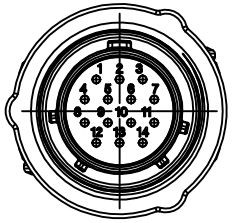

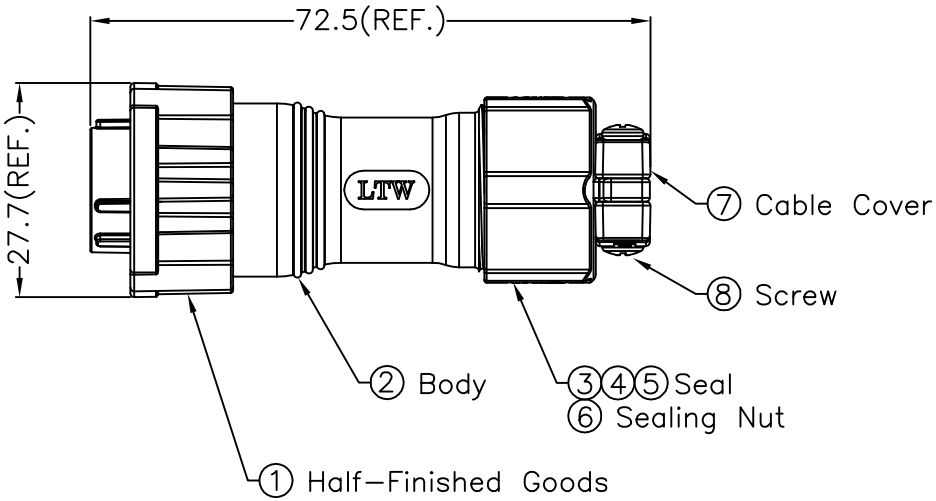

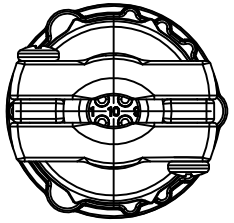

ALTW
DCC. DEPT.
CONFIDENTIAL
2010.06.09
ISSUED

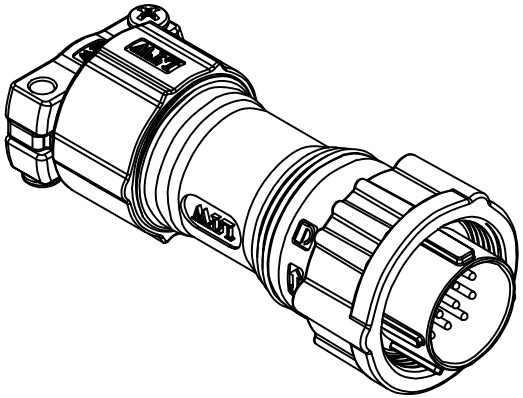

ALTW
CONFIDENTIAL
2010.04.22
R&D DEPT.

Note:

* ⓠⓒ Important Dimension
* Waterproof Rate: IP68
  IP68: 1M depth of water in 24 Hrs.
  (防水等級：IP68)
  IP68：水深一米測試 24 小時
* Cable OD: ø5.5mm~ø12.5mm
* Gasket: Silicone ,Gray
* Shell: Zinc Alloy ,Electrodeposition Coating,Black.
* Male Pin: Copper Alloy ,Gold Plated
* Insulation: Nylon ,Black
⑨ * One Set Assembled in one PE Bag.

UNIT:mm	TITLE: Circular II Series 14 Pin Assy	Amphenol LTW 安費諾亮泰企業股份有限公司	ITEM NO: HD20-14BFMA-SL8001	DRAWN BY: Jessie	DATE: 2010/04/22
TOLERANCE: .X ±0.25, .XX ±0.1, .XXX ±0.05, ANGLES ±1°	SCALE: Free / SHEET: 1 OF 1		DWG NO: HD20-14BFMA-SL8001	CHECKED BY: Jimmy	DATE: 2010/05/12
	REV. A / SIZE A4 / ⓠⓒ :Inspection Item		CUSTOMER: ALTW	APPROVED BY: Win	DATE: 2010/05/12

THIS DOCUMENT IS SUBJECT TO CHANGE WITHOUT NOTICE. IT IS CONFIDENTIAL AND A PROPERTY OF Amphenol LTW. DISCLOSURE TO THIRD PARTY HAS TO BE AUTHORIZED BY Amphenol LTW.