REV.	ECN NO.	DATE	SIGN	DESCRIPTION
E	C210798	2021/05/21	Ruru	E XI
F	C221973	2022/12/21	Ruru	F XI
G	C231034	2023/08/08	Ruru	G XI

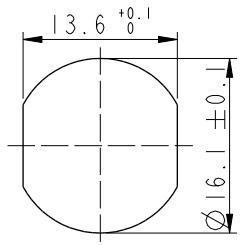

Recommended Panel Cut-Out

C

C
M12A-XXPFFR-SF8002

XX: No. Of Pin

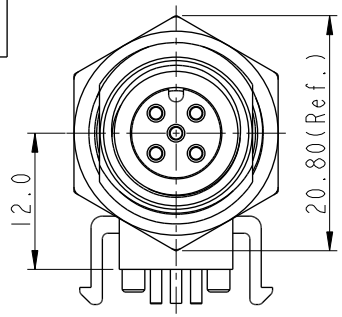

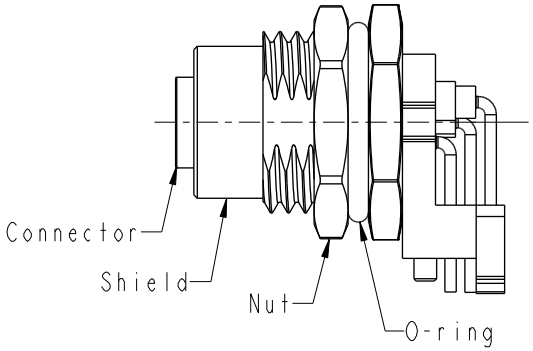

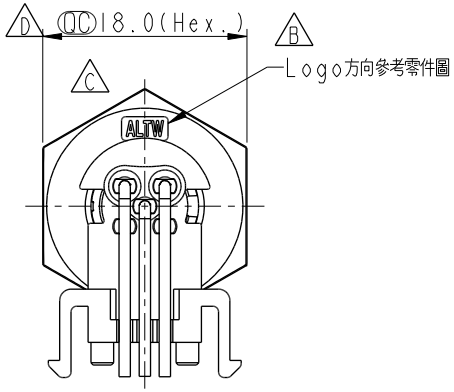

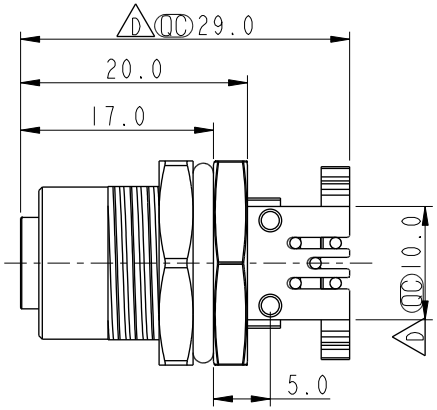

C D Note:
* RoHS Compliant
* QC Important dimension
F * Waterproof rate: IP68, unmated 1m/24h
G IP69K, mated
* Connector
Housing: Thermoplastic, Black
Pin: Copper alloy, Gold plated
E O-Ring: Rubber, Gray
* Shield: Metal
* Nut: Metal
* O-Ring: Rubber, Black
* For panel thickness max: 4.5mm
* For pcb thickness max: 1.6mm
* Nut is packed separately in pe bag

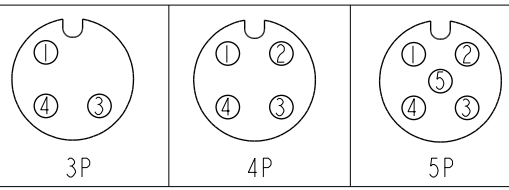

3P 4P 5P

Pin Assignment Front View

UNIT: mm

TOLERANCE
.X ±0.25
.XX ±0.1
.XXX ±0.05
ANGLES ±1°

TITLE: N SEN, M12 A, SCREW RECEPTACLE, F, F, PCB R D

SCALE: 3:2 | SIZE: A4 | SHEET 1 OF 2

REV.: G | WC-REV.: A.2 | QC: Inspection item

Amphenol LTW
安費諾亮泰企業股份有限公司

ITEM NO	DRAWN BY	DATE
	Frank Deng	2017-10-23
DWG NO: C M12A-XXPFFR-SF8002	CHECKED BY: Fisher Wang	DATE: 2017-10-23
CUSTOMER: ALTW	APPROVED BY: Kevin Hu	DATE: 2017-10-23

W10814-03-[illegible]01A2

THIS DOCUMENT IS SUBJECT TO CHANGE WITHOUT NOTICE. IT IS CONFIDENTIAL AND A PROPERTY OF Amphenol LTW. DISCLOSURE TO THIRD PARTY HAS TO BE AUTHORIZED BY Amphenol LTW.

PCB Layout

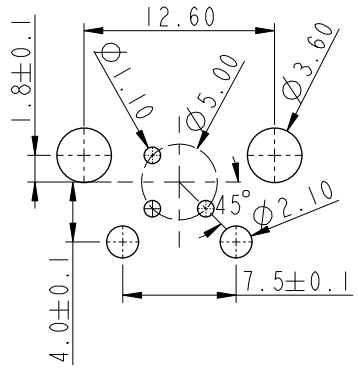

3P

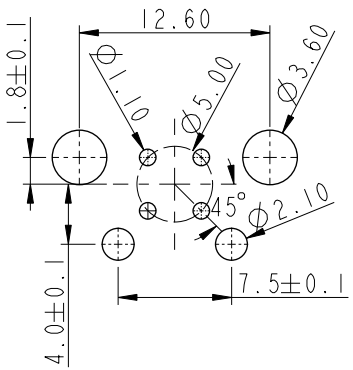

4P

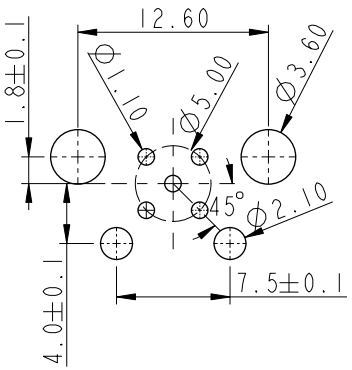

5P

UNIT: mm

TOLERANCE

.X	±0.25
.XX	±0.1
.XXX	±0.05
ANGLES	±1°

TITLE	N SEN, M12 A, SCREW RECEPTACLE, F, F, PCB R (D)
SCALE	3:2
SIZE	A4
SHEET	2 OF 2
REV.	G
WC-REV.	A.2
	(QC): Inspection item

Amphenol LTW

安費諾亮泰企業股份有限公司

ITEM NO		DRAWN BY: Frank Deng	DATE: 2017-10-23
DWG NO: (C) M12A-XXPFFR-SF8002		CHECKED BY: Fisher Wang	DATE: 2017-10-23
CUSTOMER: ALTW		APPROVED BY: Kevin Hu	DATE: 2017-10-23

W10814-03-[illegible]01A2

THIS DOCUMENT IS SUBJECT TO CHANGE WITHOUT NOTICE. IT IS CONFIDENTIAL AND A PROPERTY OF Amphenol LTW. DISCLOSURE TO THIRD PARTY HAS TO BE AUTHORIZED BY Amphenol LTW.