REV.	ECN NO.	DATE	SIGN	DESCRIPTION
C	C210561	2021/04/12	Vicky	C X2
D	C221877	2022/12/09	Ruru	D X1
E	C240626	2024/06/25	Lavy	E X2

B
M12B-XXBFFA-SR7001

XX: No. Of Pin

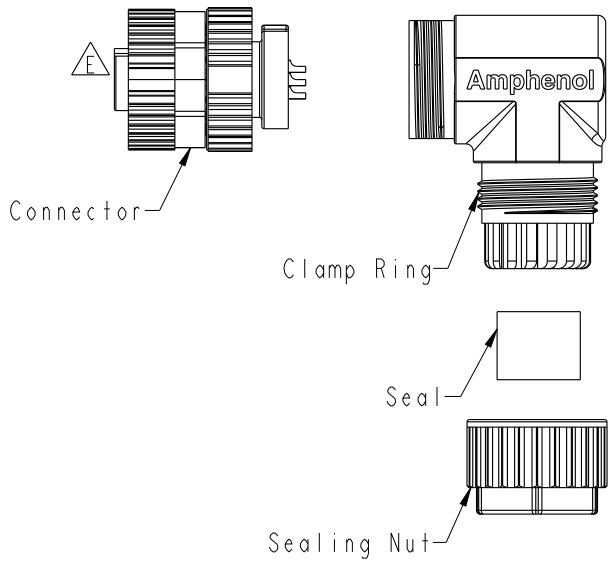

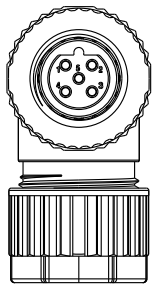

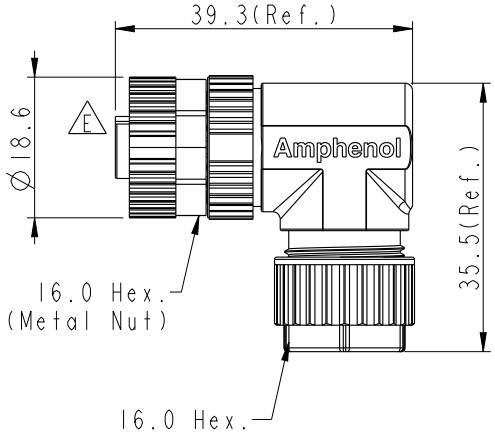

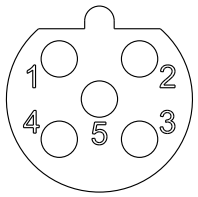

5P

Pin Assignments
Front View

C
Note:
* RoHS Compliant
* QC Important Dimension
D * Waterproof rate: IP67, mated
* Connector
  Housing: Thermoplastic, Black
  Pin: Copper alloy, Gold plated
  Extension Nut: Thermoplastic, Black
  Nut: Metal
  O-Ring: Rubber, Gray
* Clamp Ring: Thermoplastic, Black
* Sealing Nut: Thermoplastic, Black
* Seal: Rubber, Gray, OD:Ø4.0mm~Ø7.0mm
* One set unassembled in one pe bag

UNIT: mm

TOLERANCE
.X ±0.25
.XX ±0.1
.XXX ±0.05
ANGLES ±1°

TITLE: N SEN, M12 B, SCREW CABLE W/O SR, F, F, FI SOLDER (C)

SCALE	SIZE	SHEET	OF
1:1	A4	1	1

REV. E | WC-REV. A.5 | QC: Inspection item

Amphenol LTW
安費諾亮泰企業股份有限公司

ITEM NO	DRAWN BY	DATE
	Lavy	2024/06/25
DWG NO: B M12B-XXBFFA-SR7001	CHECKED BY: Jerry	DATE: 2024/06/25
CUSTOMER: ALTW	APPROVED BY: Fred	DATE: 2024/06/25

WI0814-03-RM01A2

THIS DOCUMENT IS SUBJECT TO CHANGE WITHOUT NOTICE. IT IS CONFIDENTIAL AND A PROPERTY OF Amphenol LTW. DISCLOSURE TO THIRD PARTY HAS TO BE AUTHORIZED BY Amphenol LTW.