REV.	ECN NO.	DATE	SIGN	DESCRIPTION
F	C221973	2022/12/22	Ruru	F XI
G	C231034	2023/08/08	Ruru	G XI
H	C241122	2024/10/27	Henry	H XI

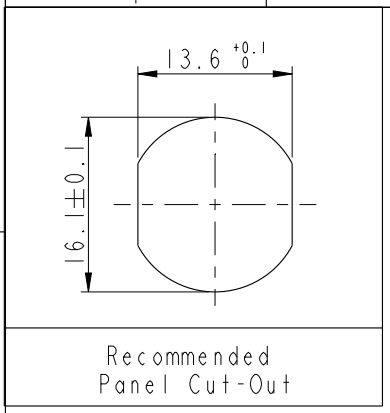

Recommended Panel Cut-Out

C D

MI2B-XXPFFP-SF8002

XX: No. Of Pin

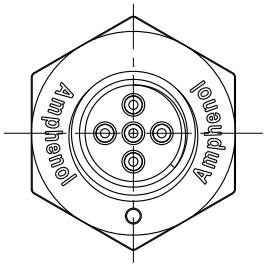

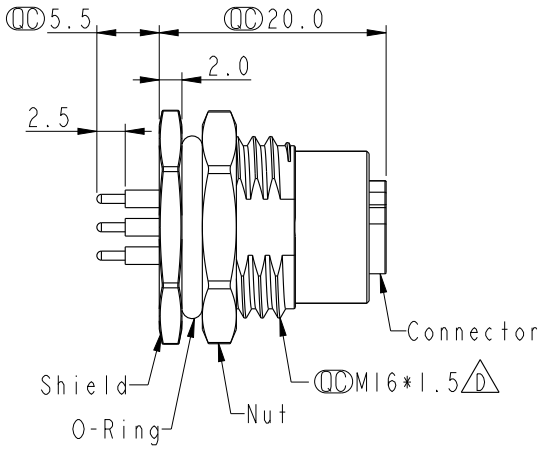

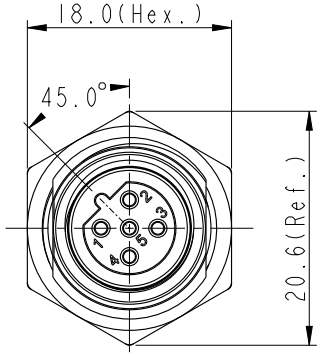

C

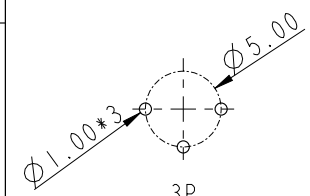

3P

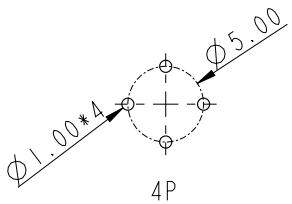

4P

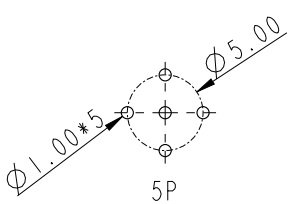

5P

PCB Layout

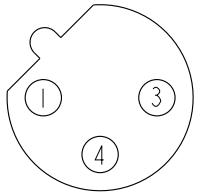

3P

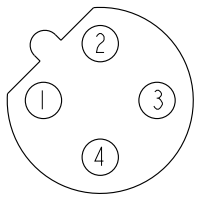

4P

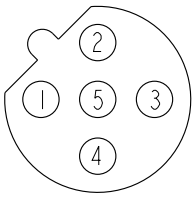

5P

Pin Assignment Front View

D E Note:
- * RoHS Compliant
- * QC Important dimension
- F C * Waterproof rate: IP68, unmated 1m/24h
  - G IP69K, mated
- * Connector
  - Housing: Thermoplastic, Black
  - Pin: Copper alloy, Gold plated
  - O-Ring: Rubber, Green
- * Shield: Metal
- * Nut: Metal
- * O-Ring: Rubber, Black
- * For panel thickness max: 4.5mm
- * Nut is packed separately in pe bag

UNIT: mm

TOLERANCE

.X	±0.25
.XX	±0.1
.XXX	±0.05
ANGLES	±1°

TITLE: N SEN, MI2 B, SCREW RECEPTACLE, F, F, PCB S E			
SCALE 3:2	SIZE A4	SHEET 1 OF 1	
REV. H	WC-REV. A.5	QC: Inspection item	

Amphenol LTW

安費諾亮泰企業股份有限公司

ITEM NO	DRAWN BY Henry	DATE 2024-10-27
DWG NO D MI2B-XXPFFP-SF8002	CHECKED BY Jerry	DATE 2024-10-27
CUSTOMER ALTW	APPROVED BY Fred	DATE 2024-10-27

WI0814-03-[redacted]01A2

THIS DOCUMENT IS SUBJECT TO CHANGE WITHOUT NOTICE. IT IS CONFIDENTIAL AND A PROPERTY OF Amphenol LTW. DISCLOSURE TO THIRD PARTY HAS TO BE AUTHORIZED BY Amphenol LTW.