REV.	ECN NO.	DATE	SIGN	DESCRIPTION
F	C221973	2022/12/22	Ruru	F XI
G	C231034	2023/08/09	Ruru	G XI
H	C241122	2024/10/29	Henry	H XI

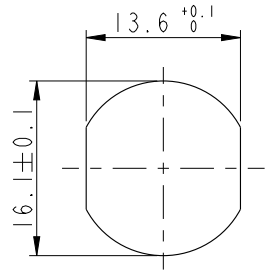

Recommended Panel Cut-Out

B D H

C D M12B-XXPFFS-SH8002

XX: No. Of Pin

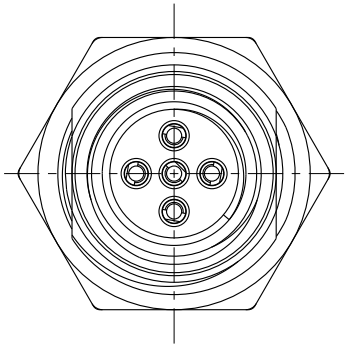

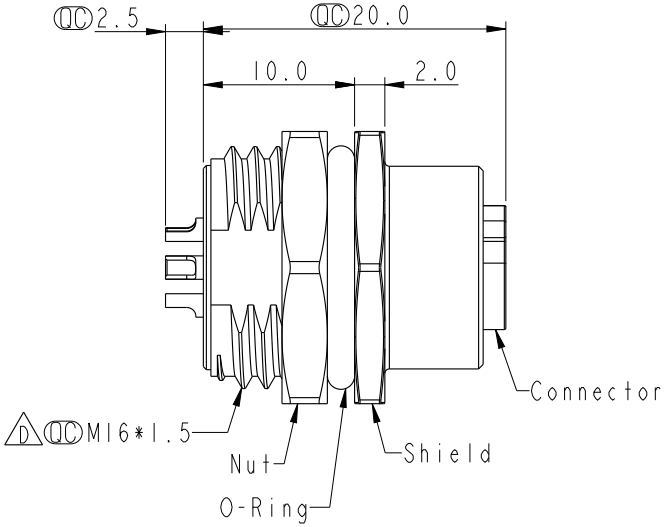

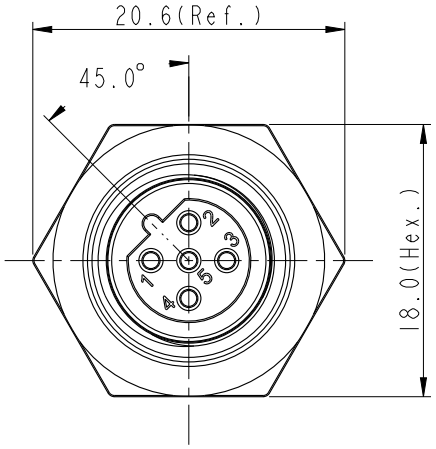

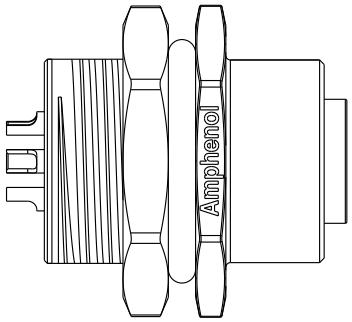

D E Note:
- * RoHS Compliant
- * QC Important dimension
- F C * Waterproof rate: IP68, unmated 1m/24h
  - G IP69K, mated
- * Connector
  - Housing: Thermoplastic, Black
  - Pin: Copper alloy, Gold plated
  - O-Ring: Rubber, Green
- * Shield: Metal
- * Nut: Metal
- * O-Ring: Rubber, Black
- * For panel thickness max: 4.5mm
- * Nut is packed separately in pe bag

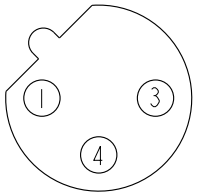

3P

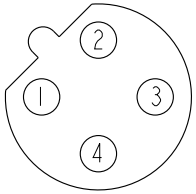

4P

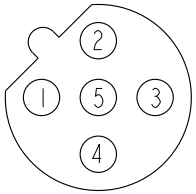

5P

Pin Assignment Front View

C

UNIT: mm

TOLERANCE
- .X ±0.25
- .XX ±0.1
- .XXX ±0.05
- ANGLES ±1°

TITLE: N SEN, M12 B, SCREW RECEPTACLE, F, F, SOLDER E

SCALE: 2:1 | SIZE: A4 | SHEET 1 OF 1

REV. H | WC-REV. A.5 | QC: Inspection item

Amphenol LTW

安費諾亮泰企業股份有限公司

ITEM NO	DRAWN BY	DATE
	Henry	2024-10-29
DWG NO: D M12B-XXPFFS-SH8002	CHECKED BY: Jerry	DATE: 2024-10-29
CUSTOMER: ALTW	APPROVED BY: Fred	DATE: 2024-10-29

WI0814-03-RM01A2

THIS DOCUMENT IS SUBJECT TO CHANGE WITHOUT NOTICE. IT IS CONFIDENTIAL AND A PROPERTY OF Amphenol LTW. DISCLOSURE TO THIRD PARTY HAS TO BE AUTHORIZED BY Amphenol LTW.