REV.	ECN NO.	DATE	SIGN	DESCRIPTION
A		2022/06/24	Roy Lin	Rev.01 to Rev.A
B	C221890	2022/12/28	Vicky	B X1

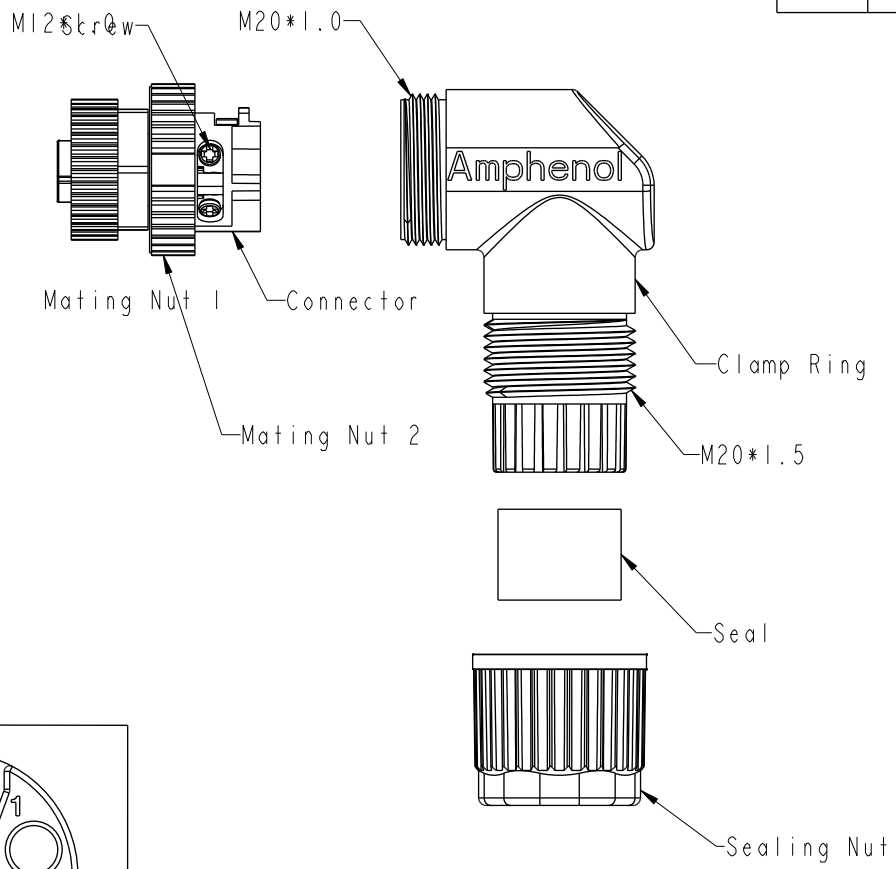

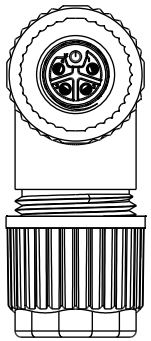

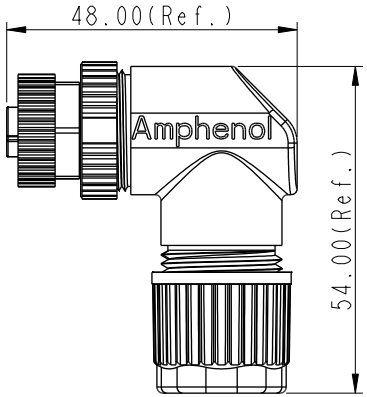

M12L-XXBFDB-SR7001

XX: No. Of Pin

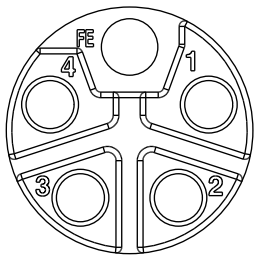

4+FE

Pin Assignments
Front View

Notes:
* RoHS Compliant
* (QC) Important Dimension
B * Waterproof Rate: IP67, mated.
* Connector
  Housing: Thermoplastic, Black.
  Pin: Copper Alloy, Gold Plated.
  O-Ring: Rubber, Gray.
  Fixed Plate: Metal.
  Mating Nut 1: Metal.
  Mating Nut 2: Thermoplastic, Black.
  Screw: Metal.
* Clamp Ring: Thermoplastic, Black.
* Sealing Nut: Thermoplastic, Black.
* Seal 1: Rubber, Black, OD: ∅12.0mm~14.0mm.
* Seal 2: Rubber, Gray, OD: ∅10.0mm~12.0mm.
* Seal 3: Rubber, Black, OD: ∅8.0mm~10.0mm.
* Rated Voltage: 63V DC.
* Rated Current: 16A.
* Screws For Wire Connection Recommended Tightening Torque: 0.61~0.84kgf.cm/0.059~0.082N.m.
* Applicable Wire Gauge: 16AWG~14AWG.
* Mating Recommended Tightening Torque: 3~4 kgf.cm / 0.29~0.39 N.m.
* Sealing Nut Recommended Tightening Torque: 4~6 kgf.cm / 0.39~0.59 N.m.
* One set unassembled in one pe bag.

UNIT: mm

TOLERANCE
.X ±0.25
.XX ±0.1
.XXX ±0.05
ANGLES ±1°

TITLE: N SEN, M12 L, 05P, SCREW CABLE W/O SR, F, F PWR+M GND, F1 SCREWIN

SCALE 1:1 | SIZE A4 | SHEET 1 OF 1

REV. B | WC-REV. .0 | (QC): Inspection item

Amphenol LTW
安費諾亮泰企業股份有限公司

ITEM NO	DRAWN BY: Roy Lin	DATE: 2022/06/24
DWG NO: M12L-XXBFDB-SR7001	CHECKED BY: Victor Hung	DATE: 2022/06/24
CUSTOMER: ALTW	APPROVED BY: Max Yang	DATE: 2022/06/24

W10814-03-[redacted]01A2

THIS DOCUMENT IS SUBJECT TO CHANGE WITHOUT NOTICE. IT IS CONFIDENTIAL AND A PROPERTY OF Amphenol LTW. DISCLOSURE TO THIRD PARTY HAS TO BE AUTHORIZED BY Amphenol LTW.