No.of Contact	Cable OD(mm)	Item No.
4P	8.2	M12S-04BMMM-SR8GXX
3P	7.5	M12S-03BMMM-SR8GXX

B C

REV.	ECN NO.	DATE	SIGN	DESCRIPTION
B	C211568	2021/10/15	Li Dai	B X1
C	C221810	2022/12/07	Li Dai	C X4
D	C230009	2023/01/03	Vicky	D X3

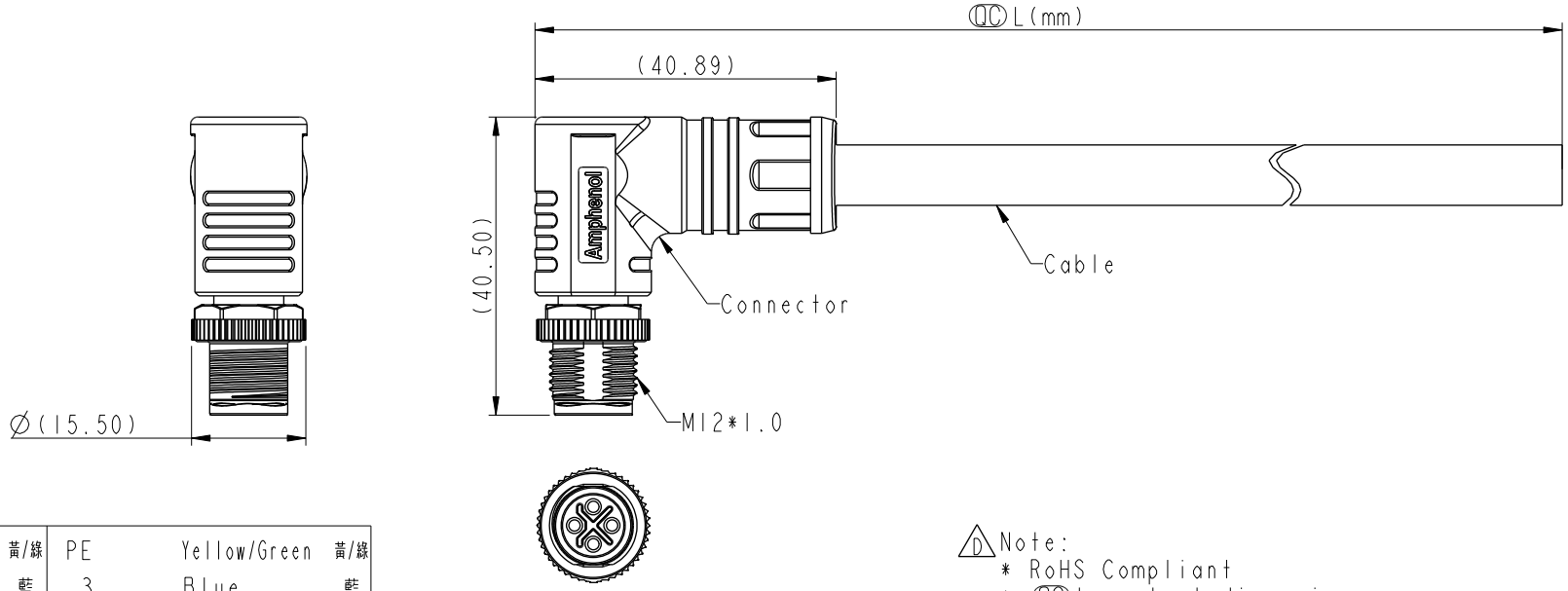

Pin #	Wire		Pin #	Wire	
PE	Yellow/Green	黃/綠	PE	Yellow/Green	黃/綠
3	Blue	藍	3	Blue	藍
			2	White	白
1	Brown	棕	1	Brown	棕

Pin Out

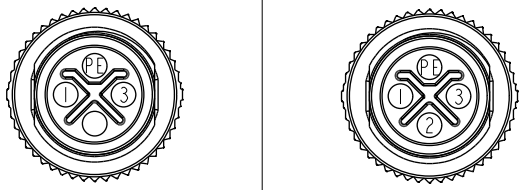

2+PE 3+PE

Pin Assignments Front View

M12S-XXBMMM-SR8GXX C

XX: 01~99 Meters
01: 01 Meter
02: 02 Meters
.
.
99: 99 Meters

No. of Pin

D Note:
* RoHS Compliant
* QC Important dimension
D * Waterproof rate: IP68, mated 1m/24h
IP69K, mated
* Connector
Housing: Thermoplastic, Black
Pin: Copper alloy, Gold plated
Nut: Metal
Outer mold: Thermoplastic, Black
C * Cable: UL2586, 16AWG, PVC Jacket, Black
* Cable length tolerance: 1M: +50/-0 mm
1M < L ≦ 3M: +100/-0 mm
3M < L ≦ 5M: +150/-0 mm
5M < L ≦ 10M: ±100 mm
10M < L ≦ 20M: ±200 mm
20M < L ≦ 30M: ±300 mm
30M < L ≦ 99M: ±500 mm

UNIT:mm

TOLERANCE ±0.5mm

TITLE: N SEN, M12 S, SCREW CABLE W/O SR, M, M, MOLDING D

SCALE 1:1 | SIZE A4 | SHEET 1 OF 1

REV. D | WC-REV. .0 | QC: Inspection item

Amphenol LTW
安費諾亮泰企業股份有限公司

ITEM NO	DRAWN BY: Li Dai	DATE: 2021-09-28
DWG NO: C M12S-XXBMMM-SR8GXX	CHECKED BY: Fisher Wang	DATE: 2021-09-28
CUSTOMER: ALTW	APPROVED BY: Max Yang	DATE: 2021-09-28

W10814-03-RW01A2

THIS DOCUMENT IS SUBJECT TO CHANGE WITHOUT NOTICE. IT IS CONFIDENTIAL AND A PROPERTY OF Amphenol LTW. DISCLOSURE TO THIRD PARTY HAS TO BE AUTHORIZED BY Amphenol LTW.