REV.	ECN NO.	DATE	SIGN	DESCRIPTION
E	C210309	2021/03/10	Ruru	E X2
F	C221890	2022/12/29	Vicky	F X1
G	C231037	2023/08/08	Vicky	G X1

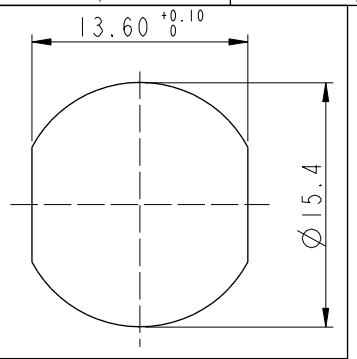

Recommended Panel Cut-Out

C M12T-XXPMMP-SF8001

XX: No. Of Pin

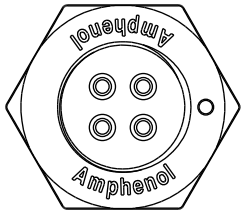

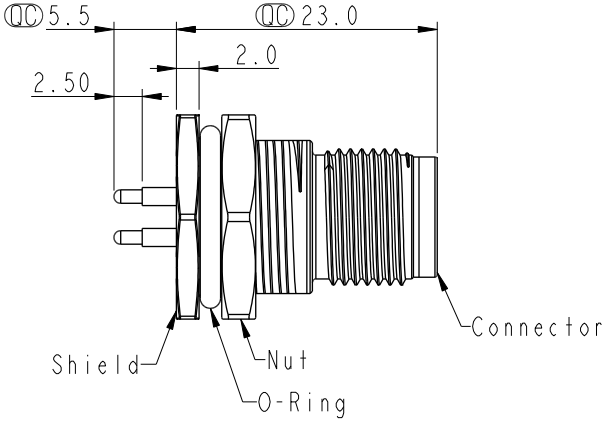

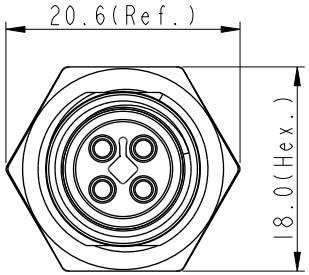

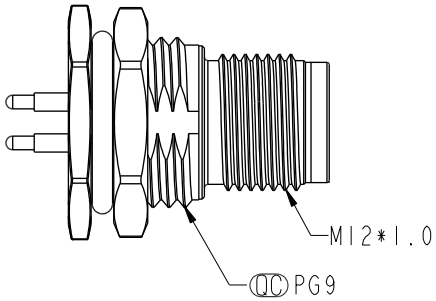

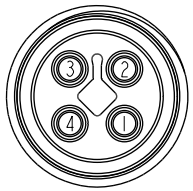

4P

Pin Assignment Front View

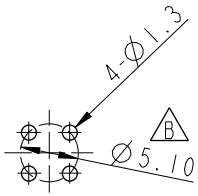

4P

PCB Layout

C E Note:
- * RoHS Compliant
- * QC Important dimension
- F * Waterproof rate: IP68, unmated 1m/24h
  - G IP69K, mated
- * Connector
  - Housing: Thermoplastic, Black
  - Pin: Copper alloy, Gold plated
- D * Shield: Metal
- D * Nut: Metal
- * O-Ring: Rubber, Black
- * For panel thickness max: 4.5mm
- * Nut is packed separately in pe bag

UNIT: mm

TOLERANCE
.X ±0.25
.XX ±0.1
.XXX ±0.05
ANGLES ±1°

TITLE: N SEN, M12 T, SCREW. RECEPTACLE, M, M, PCB S C E			
SCALE 1:1	SIZE A4	SHEET 1 OF 1	
REV. G	WC-REV. A.2	QC: Inspection item	

Amphenol LTW

安費諾亮泰企業股份有限公司

ITEM NO	DRAWN BY Neo	DATE 2018/03/05
DWG NO C M12T-XXPMMP-SF8001	CHECKED BY Chingmei	DATE 2018/03/05
CUSTOMER ALTW	APPROVED BY Max	DATE 2018/03/05

WI0814-03-RW01A2

THIS DOCUMENT IS SUBJECT TO CHANGE WITHOUT NOTICE. IT IS CONFIDENTIAL AND A PROPERTY OF Amphenol LTW. DISCLOSURE TO THIRD PARTY HAS TO BE AUTHORIZED BY Amphenol LTW.