REV.	ECN NO.	DATE	SIGN	DESCRIPTION
A		2023/11/21	Yunchen	Rev.01 to Rev.A
B	C240471	2024/06/14	Sam Ho	B X2

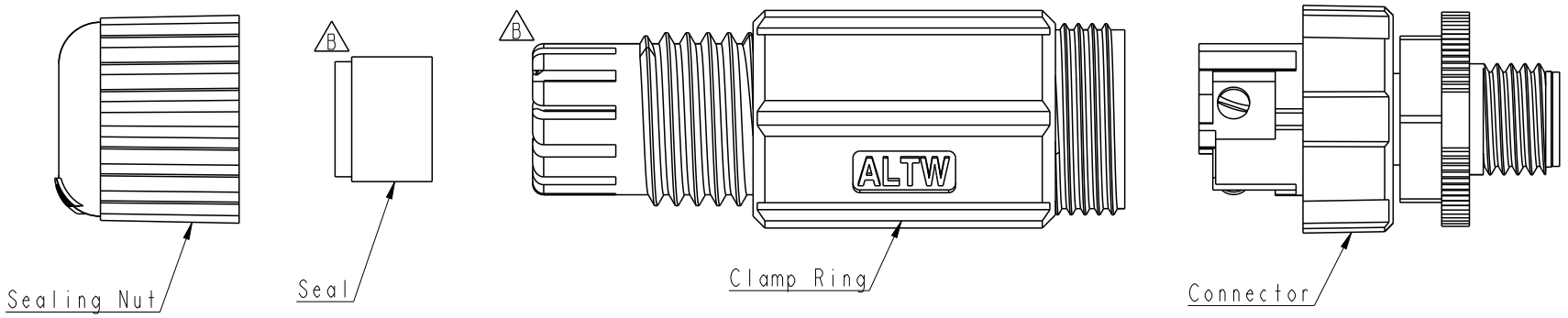

M8-XXBMMB-SL7001

XX: No. Of Pin

Note:
* RoHS Compliant
* QC Important Dimension
* Waterproof rate: IP67, mated
* Connector
  Housing: Thermoplastic, Black
  Pin: Copper alloy, Gold plated
  Extension Nut: Metal
  Nut: Thermoplastic, Black
  O-Ring: Rubber, Black
* Clamp Ring: Thermoplastic, Black
* Sealing Nut: Thermoplastic, Black
* Seal: Rubber, Black, OD:∅4.5mm~∅6.5mm
* One set unassembled in one pe bag

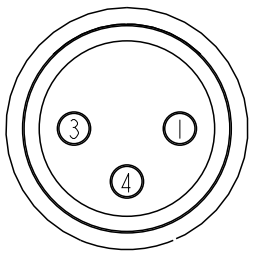

Pin Assignments
Front View

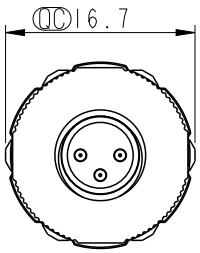

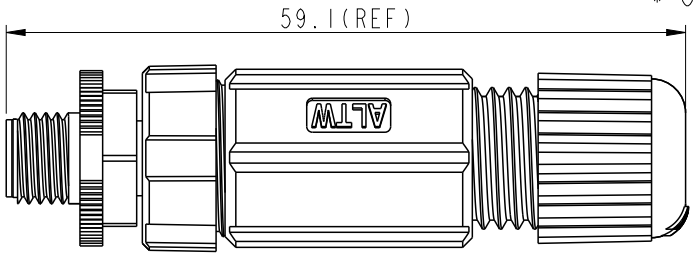

UNIT: mm	TITLE: N SEN, M8, SCREW CABLE W/O SR, M, M, FI SCREWIN		ITEM NO	DRAWN BY: Sam Ho	DATE: 2024/06/14
TOLERANCE .X ±0.25, .XX ±0.1, .XXX ±0.05, ANGLES ±1°	SCALE: 1:1	SIZE: A4	DWG NO: M8-XXBMMB-SL7001	CHECKED BY: Aric Ko	DATE: 2024/06/14
	REV.: B	WC-REV.: A.1	CUSTOMER: ALTW	APPROVED BY: Fred Lee	DATE: 2024/06/14
	SHEET 1 OF 1	QC: Inspection item			

Amphenol LTW
安費諾亮泰企業股份有限公司

THIS DOCUMENT IS SUBJECT TO CHANGE WITHOUT NOTICE. IT IS CONFIDENTIAL AND A PROPERTY OF Amphenol LTW. DISCLOSURE TO THIRD PARTY HAS TO BE AUTHORIZED BY Amphenol LTW.