REV.	ECN NO.	DATE	SIGN	DESCRIPTION
B	C231610	2023-12-27	Ouyang	B X2
C	C240056	2024-01-11	Ouyang	C X1
D	C241094	2024-10-09	Henry	D X1

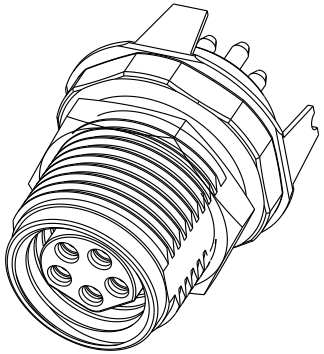

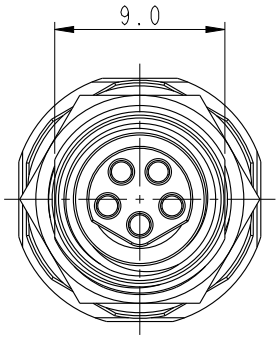

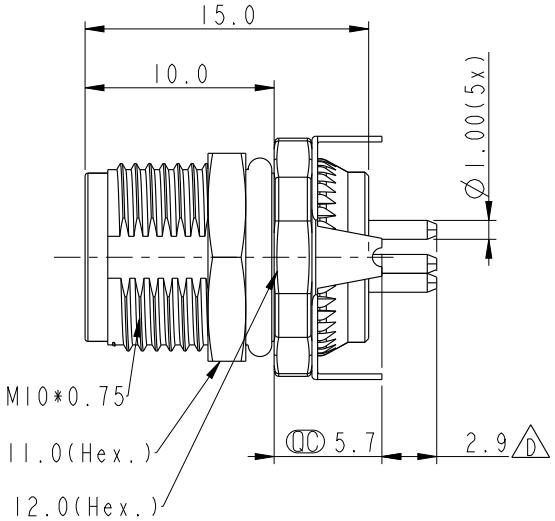

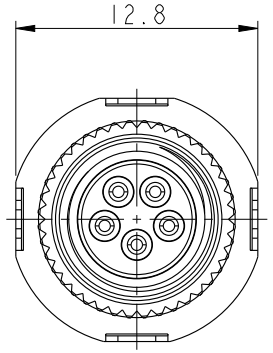

B M8B-XXPFFP-SF8001

XX: No.of Pin
05:5Pin

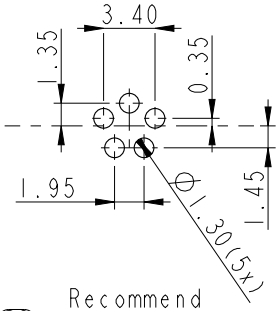

QC Recommend PCB Layout

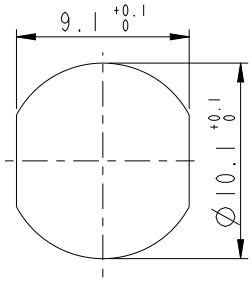

QC Recommended Panel Cut-Out

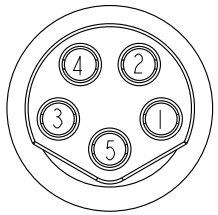

Pin Assignmen
Front View

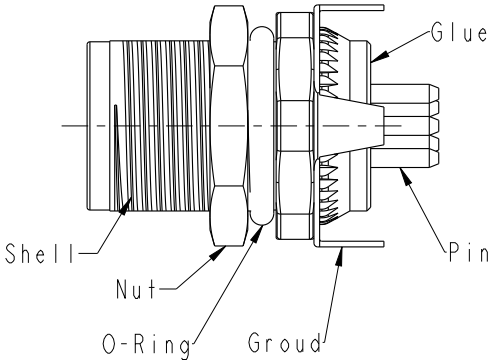

Note:
* RoHS Compliant
* QC Important Dimension.
* Waterproof Rate: IP68.Unmated 1m/24h Connector
* Housing: Thermoplastic, Black.
* Pin: Copper Alloy, Gold Plated.
* Shell: Metal, Nickel Plated.
* Ground Lug: Metal,
* Screw Nut: Metal,
* O-Ring: Rubber,Green.
* For Panel Thickness: 2.0mm~4.5mm.
* For PCB Thickness: Max=1.6mm.
* Nut is packed separately in the bag

UNIT:mm

TOLERANCE
.X ±0.25
.XX ±0.1
.XXX ±0.05
ANGLES ±1°

TITLE: SEN, M8 B CODE, 05P, SCREW RECEPTACLE, F, F, PCB L

SCALE 1:1 | SIZE A4 | SHEET 1 OF 1
REV. D | WC-REV. .0 | QC: Inspection item

Amphenol LTW
安費諾亮泰企業股份有限公司

ITEM NO: B	DRAWN BY: Henry	DATE: 2024-10-09
DWG NO: M8B-XXPFFP-SF8001	CHECKED BY: Jerry	DATE: 2024-10-09
CUSTOMER: ALTW	APPROVED BY: Fred	DATE: 2024-10-09

W10814-03-[redacted]01A2

THIS DOCUMENT IS SUBJECT TO CHANGE WITHOUT NOTICE. IT IS CONFIDENTIAL AND A PROPERTY OF Amphenol LTW. DISCLOSURE TO THIRD PARTY HAS TO BE AUTHORIZED BY Amphenol LTW.