REV.	ECN NO.	DATE	SIGN	DESCRIPTION
E	C210561	2021/04/14	Vicky	E X3
F	C210977	2021/06/23	Vicky	F X1
G	C230008	2023/01/04	Vicky	G X1

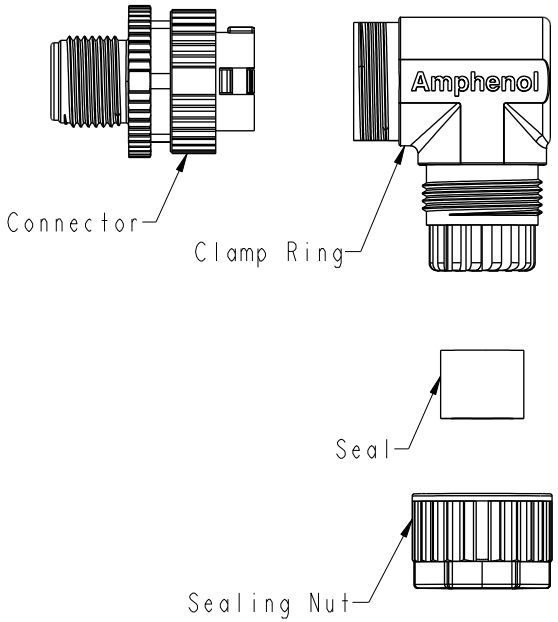

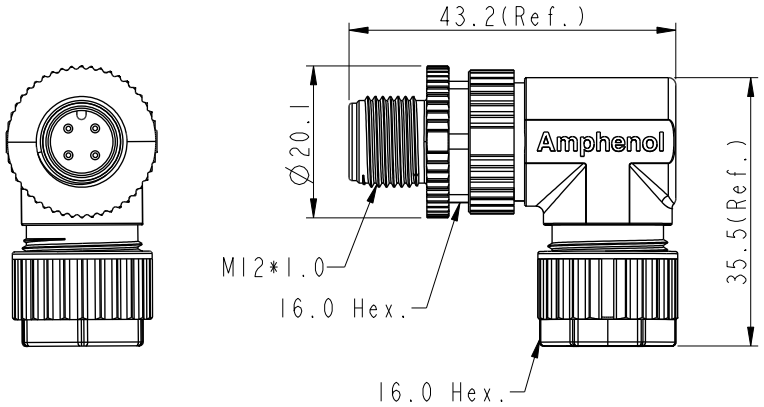

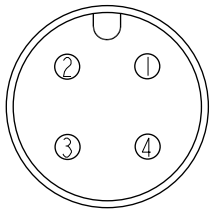

4P

Pin Assignments
Front View

PE Bag

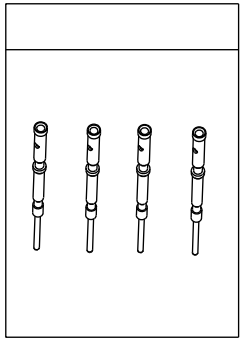

D MSAP-XXBMMC-SR7001

XX: No. Of Pin

E
Note:
* RoHS Compliant
* (QC) Important Dimension
G * Waterproof rate: IP67, mated
* Connector
  Housing: Thermoplastic, Black
  Pin: Copper alloy, Gold plated
  Extension Nut: Thermoplastic, Black
  Nut: Thermoplastic, Black
D O-Ring: Rubber, Gray
* Clamp Ring: Thermoplastic, Black
* Sealing Nut: Thermoplastic, Black
C * Seal: Rubber, Gray, OD:Ø4.0mm~Ø7.0mm
F * Applicable wire gauge: 20AWG~24AWG
* One set unassembled in one pe bag

B

UNIT:mm

TOLERANCE
.X ±0.25
.XX ±0.1
.XXX ±0.05
ANGLES ±1°

E

TITLE: N SEN, M12 A -PLASTIC, SCREW CABLE W/O SR, M, M, F1/PANEL CRIMP D E

SCALE: Free | SIZE: A4 | SHEET 1 OF 1

REV. G | WC-REV. .0 | (QC): Inspection item

Amphenol LTW
安費諾亮泰企業股份有限公司

ITEM NO	DRAWN BY: Xiaofeng	DATE: 2019/12/18
DWG NO: D MSAP-XXBMMC-SR7001	CHECKED BY: Li-Feng	DATE: 2019/12/18
CUSTOMER: ALTW	APPROVED BY: Jerry	DATE: 2019/12/18

W10814-03-[redacted]01A2

THIS DOCUMENT IS SUBJECT TO CHANGE WITHOUT NOTICE. IT IS CONFIDENTIAL AND A PROPERTY OF Amphenol LTW. DISCLOSURE TO THIRD PARTY HAS TO BE AUTHORIZED BY Amphenol LTW.