REV.	ECN NO.	DATE	SIGN	DESCRIPTION
A		2024/01/23	Yunchen	Rev.03 to Rev.A
B	C240458	2024/05/06	Yunchen	B x1

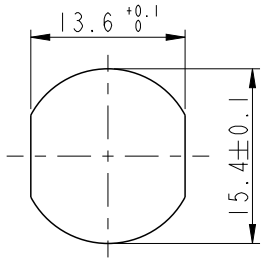

Recommended Panel Cut-Out

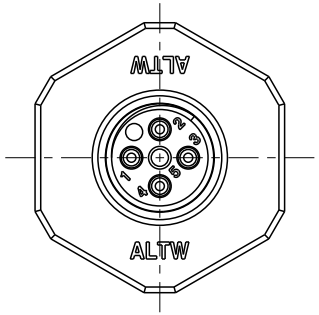

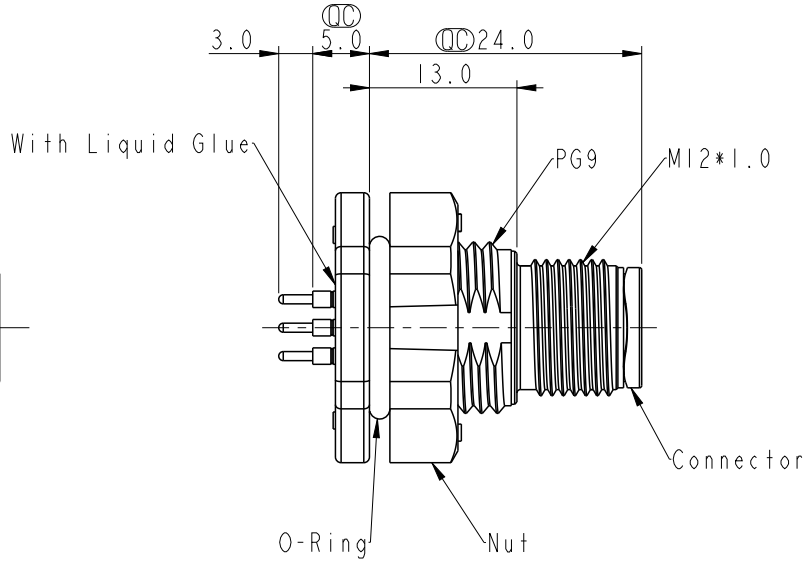

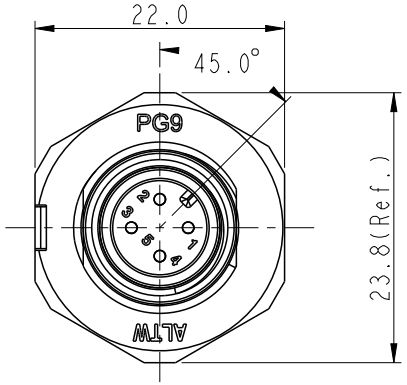

Note:
* RoHS Compliant
* QC Important Dimension To Check
* Waterproof Tate: IP68, Unmated 1m/24h
  B IP69K,Mated
* Connector
  Housing: Thermoplastic, Black.
  Pin: Copper Alloy, Glod Plated.
* Shield: Thermoplastic, Black.
* Nut: Thermoplastic, Black
* O-Ring: Rubber, Black
* For panel Thickness Max 4.0mm
* Nut is packed separately in pe bag

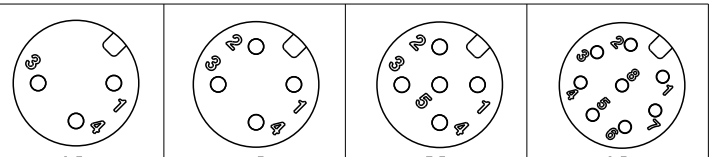

Pin Assignment Front View

UNIT:mm

TOLERANCE
.X ±0.25
.XX ±0.1
.XXX ±0.05
ANGLES ±1°

TITLE: M12 A-CodeMale Conn. PCB Front Type (Plastic)

SCALE 3:2 | SIZE A4 | SHEET 1 OF 2
REV. B | WC-REV. A.3 | QC: Inspection item

Amphenol LTW
安費諾亮泰企業股份有限公司

ITEM NO	DRAWN BY: Yunchen	DATE: 2024/05/06
DWG NO: MSAP-XXPMMP-SF8001	CHECKED BY: Aric	DATE: 2024/05/06
CUSTOMER: ALTW	APPROVED BY: Fred	DATE: 2024/05/06

THIS DOCUMENT IS SUBJECT TO CHANGE WITHOUT NOTICE. IT IS CONFIDENTIAL AND A PROPERTY OF Amphenol LTW. DISCLOSURE TO THIRD PARTY HAS TO BE AUTHORIZED BY Amphenol LTW.

MSAP - XXPMMP - SF8001

XX: No. Of Pin

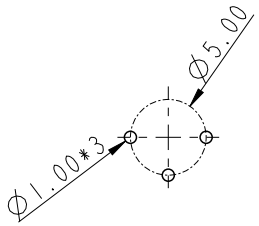

PCB Layout (3P)

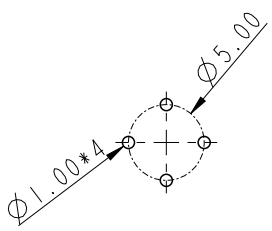

PCB Layout (4P)

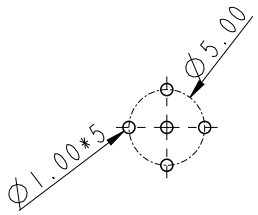

PCB Layout (5P)

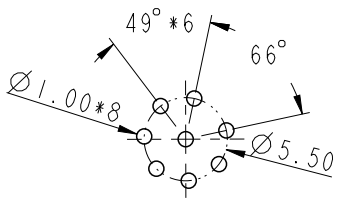

PCB Layout (8P)

UNIT:mm	TITLE: MI2 A-CodeMale Conn. PCB Front Type (Plastic)			ITEM NO	DRAWN BY: Yunchen	DATE: 2024/05/06
TOLERANCE .X ±0.25 .XX ±0.1 .XXX ±0.05 ANGLES ±1°	SCALE: 3:2	SIZE: A4	SHEET 2 OF 2	DWG NO: MSAP-XXPMMP-SF8001	CHECKED BY: Aric	DATE: 2024/05/06
	REV.: B	WC-REV.: A.3	QC: Inspection item	CUSTOMER: ALTW	APPROVED BY: Fred	DATE: 2024/05/06

Amphenol LTW

安費諾亮泰企業股份有限公司

THIS DOCUMENT IS SUBJECT TO CHANGE WITHOUT NOTICE. IT IS CONFIDENTIAL AND A PROPERTY OF Amphenol LTW. DISCLOSURE TO THIRD PARTY HAS TO BE AUTHORIZED BY Amphenol LTW.