REV.	ECN NO.	DATE	SIGN	DESCRIPTION
B	C201524	2020/10/05	Vicky	B X4
C	C210561	2021/04/15	Vicky	C X3
D	C221877	2022/12/12	Ruru	D X1

B MSBP-XXBMMB-SL7001

XX: No. Of Pin

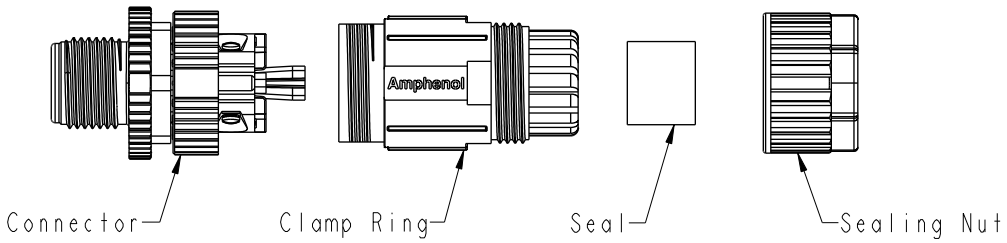

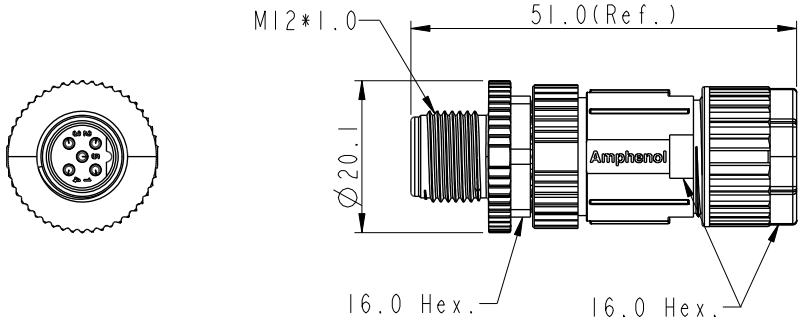

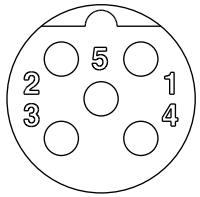

5P

Pin Assignments
Front View

B C
Note:
* RoHS Compliant
* QC Important Dimension
D * Waterproof rate: IP67, mated
* Connector
  Housing: Thermoplastic, Black
  Pin: Copper alloy, Gold plated
  Extension Nut: Thermoplastic, Black
  Nut: Thermoplastic, Black
  O-Ring: Rubber, Gray
* Clamp Ring: Thermoplastic, Black
* Sealing Nut: Thermoplastic, Black
* Seal: Rubber, Gray, OD:Ø4.0mm~Ø8.0mm
* One set unassembled in one pe bag

UNIT:mm

C
TOLERANCE
.X ±0.25
.XX ±0.1
.XXX ±0.05
ANGLES ±1°

TITLE: N SEN, M12 B -PLASTIC, SCREW CABLE W/O SR, M, M, F1 SCREWIN B C

SCALE 1:1 | SIZE A4 | SHEET 1 OF 1
REV. D | WC-REV. A.2 | QC: Inspection item

Amphenol LTW
安費諾亮泰企業股份有限公司

ITEM NO	DRAWN BY: Mila	DATE: 2015-10-12
DWG NO: B MSBP-XXBMMB-SL7001	CHECKED BY: Cary	DATE: 2015-10-12
CUSTOMER: ALTW	APPROVED BY: Jerry	DATE: 2015-10-12

THIS DOCUMENT IS SUBJECT TO CHANGE WITHOUT NOTICE. IT IS CONFIDENTIAL AND A PROPERTY OF Amphenol LTW. DISCLOSURE TO THIRD PARTY HAS TO BE AUTHORIZED BY Amphenol LTW.