REV.	ECN NO.	DATE	SIGN	DESCRIPTION
D	C210084	2021/01/18	Vicky	D X3
E	C210561	2021/04/16	Vicky	E X2
F	C221877	2022/12/13	Ruru	F X1

C MSBS-XXBMMA-SL7001

XX: No. Of Pin

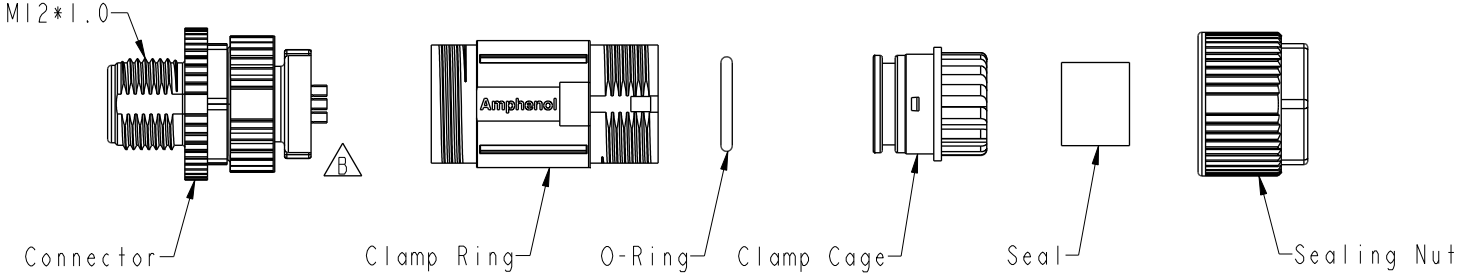

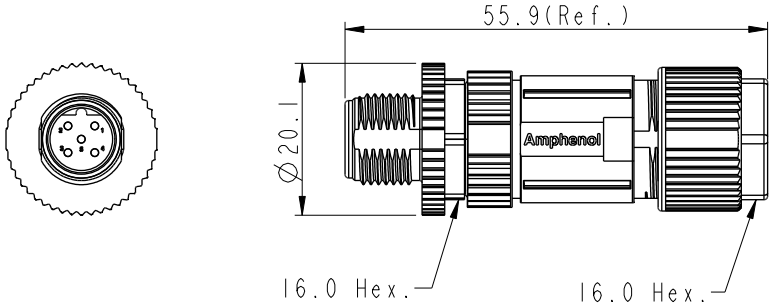

E
Note:
* RoHS Compliant
* QC Important Dimension
F * Waterproof rate: IP67, mated
* Connector
  Housing: Thermoplastic, Black
  Pin: Copper alloy, Gold plated
  Extension Nut: Metal
D Nut: Metal
  O-Ring: Rubber, Gray
D * Clamp Ring: Metal
* O-Ring: Rubber, Gray
* Clamp Cage: Thermoplastic, Black
D * Sealing Nut: Metal
* Seal: Rubber, Gray, OD:Ø4.0mm~Ø7.5mm
* One set unassembled in one pe bag

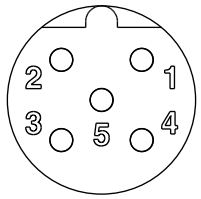

5P

Pin Assignments
Front View

UNIT:mm

TOLERANCE
.X ±0.25
.XX ±0.1
.XXX ±0.05
ANGLES ±1°

TITLE	N SEN, M12 B -SHLD, SCREW CABLE W/O SR, M, M, FI SOLDER E		
SCALE 1:1	SIZE A4	SHEET 1 OF 1	
REV. F	WC-REV. A.5	QC:Inspection item	

Amphenol LTW
安費諾亮泰企業股份有限公司

ITEM NO	DRAWN BY JC Chen	DATE 2020-04-18
DWG NO C MSBS-XXBMMA-SL7001	CHECKED BY Li Feng	DATE 2020-04-18
CUSTOMER ALTW	APPROVED BY Jerry	DATE 2020-04-18

W10814-03-RW01A2

THIS DOCUMENT IS SUBJECT TO CHANGE WITHOUT NOTICE. IT IS CONFIDENTIAL AND A PROPERTY OF Amphenol LTW. DISCLOSURE TO THIRD PARTY HAS TO BE AUTHORIZED BY Amphenol LTW.