REV.	ECN NO.	DATE	SIGN	DESCRIPTION
C	C210084	2021/01/18	Vicky	C X4
D	C210561	2021/04/16	Vicky	D X3
E	C221877	2022/12/13	Ruru	E X1

B MSBS-XXBMMB-SR7001

XX: No. Of Pin

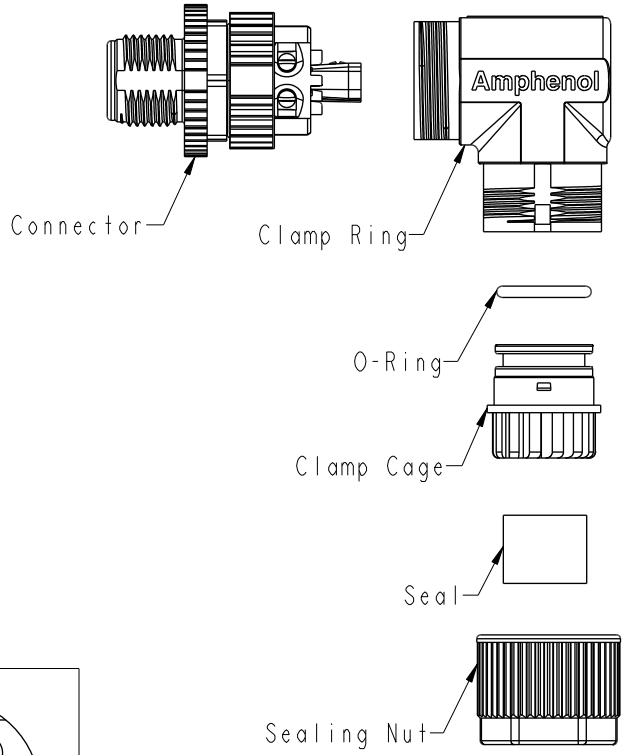

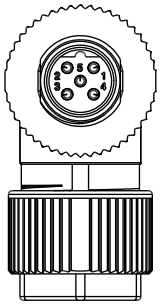

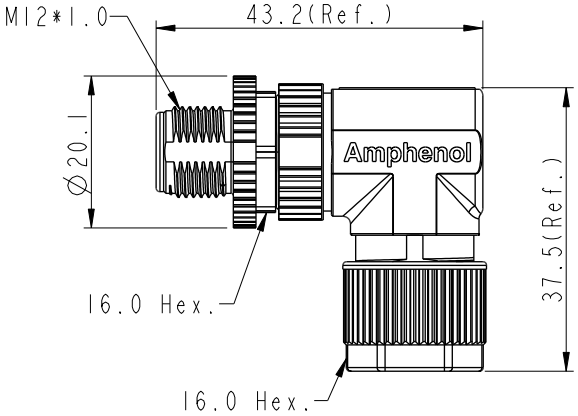

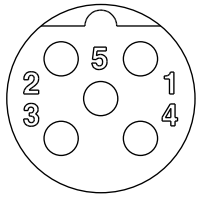

5P

Pin Assignments
Front View

B D
Note:
* RoHS Compliant
* QC Important Dimension
E * Waterproof rate: IP67, mated
* Connector
Housing: Thermoplastic, Black
Pin: Copper alloy, Gold plated
C Extension Nut: Metal
C Nut: Metal
O-Ring: Rubber, Gray
C * Clamp Ring: Metal
* O-Ring: Rubber, Gray
* Clamp Cage: Thermoplastic, Black
C * Sealing Nut: Metal
* Seal: Rubber, Gray, OD:Ø4.0mm~Ø7.0mm
* One set unassembled in one pe bag

UNIT:mm

TOLERANCE D
.X ±0.25
.XX ±0.1
.XXX ±0.05
ANGLES ±1°

TITLE: N SEN, M12 B -SHLD, SCREW B D CABLE W/O SR, M, M, F1 SCREWIN

SCALE 1:1 | SIZE A4 | SHEET 1 OF 1

REV. E | WC-REV. A.1 | QC: Inspection item

Amphenol LTW
安費諾亮泰企業股份有限公司

ITEM NO	DRAWN BY	DATE
	Mila	2015-10-13
DWG NO B MSBS-XXBMMB-SR7001	CHECKED BY Cary	DATE 2015-10-13
CUSTOMER ALTW	APPROVED BY Jerry	DATE 2015-10-13

W10814-03-[redacted]01A2

THIS DOCUMENT IS SUBJECT TO CHANGE WITHOUT NOTICE. IT IS CONFIDENTIAL AND A PROPERTY OF Amphenol LTW. DISCLOSURE TO THIRD PARTY HAS TO BE AUTHORIZED BY Amphenol LTW.