REV.	ECN NO.	DATE	SIGN	DESCRIPTION
F	C221973	2022/12/26	Ruru	F XI
G	C231034	2023/08/10	Ruru	G XI
H	C241122	2024/10/28	Henry	H XI

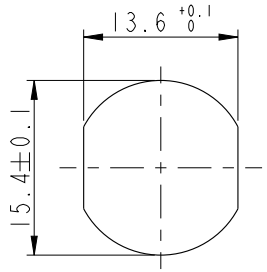

Recommended Panel Cut-Out

B D H

D C

MSBS-XXPFFP-SF8001

XX: No. Of Pin

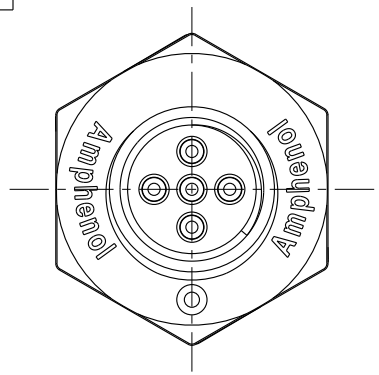

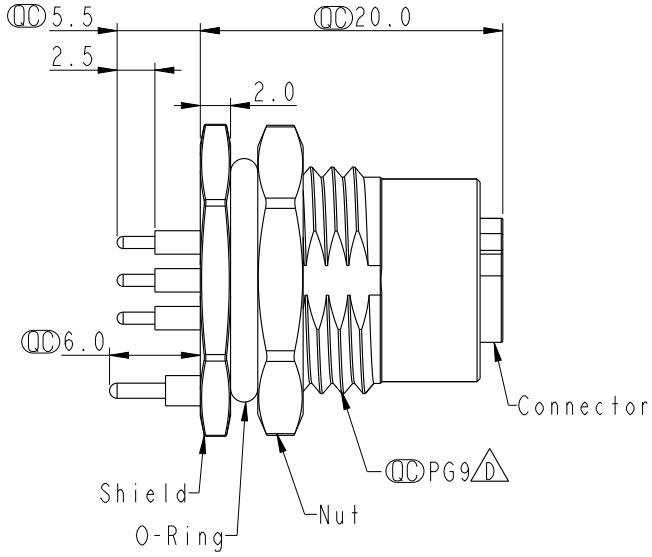

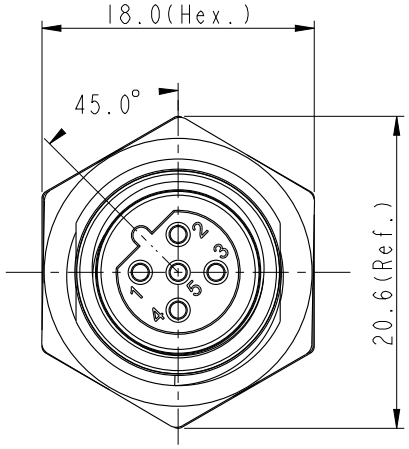

D E Note:

- RoHS Compliant
- QC Important dimension
- F C Waterproof rate: IP68, unmated 1m/24h
  G IP69K, mated
- Connector
  Housing: Thermoplastic, Black
  Pin: Copper alloy, Gold plated
  O-Ring: Rubber, Green
- Shield: Metal
- Nut: Metal
- O-Ring: Rubber, Black
- For panel thickness max: 4.5mm
- Nut is packed separately in pe bag

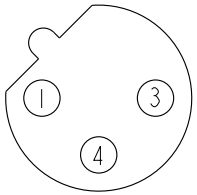

3P

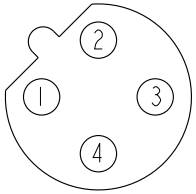

4P

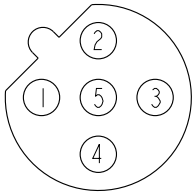

5P

Pin Assignment Front View

C

UNIT: mm	TITLE: N SEN, M12 B -SHLD, SCREW RECEPTACLE, F, F, PCB S E	Amphenol LTW 安費諾亮泰企業股份有限公司	ITEM NO	DRAWN BY: Henry	DATE: 2024-10-28
TOLERANCE .X ±0.25 .XX ±0.1 .XXX ±0.05 ANGLES ±1°	SCALE: 3:2 / SIZE: A4 / SHEET 1 OF 2		DWG NO: D MSBS-XXPFFP-SF8001	CHECKED BY: Jerry	DATE: 2024-10-28
	REV.: H / WC-REV.: A.5	QC: Inspection item	CUSTOMER: ALTW	APPROVED BY: Fred	DATE: 2024-10-28

WI0814-03-[redacted]01A2

THIS DOCUMENT IS SUBJECT TO CHANGE WITHOUT NOTICE. IT IS CONFIDENTIAL AND A PROPERTY OF Amphenol LTW. DISCLOSURE TO THIRD PARTY HAS TO BE AUTHORIZED BY Amphenol LTW.

THIS DOCUMENT IS SUBJECT TO CHANGE WITHOUT NOTICE. IT IS CONFIDENTIAL AND A PROPERTY OF Amphenol LTW. DISCLOSURE TO THIRD PARTY HAS TO BE AUTHORIZED BY Amphenol LTW.

PCB Layout

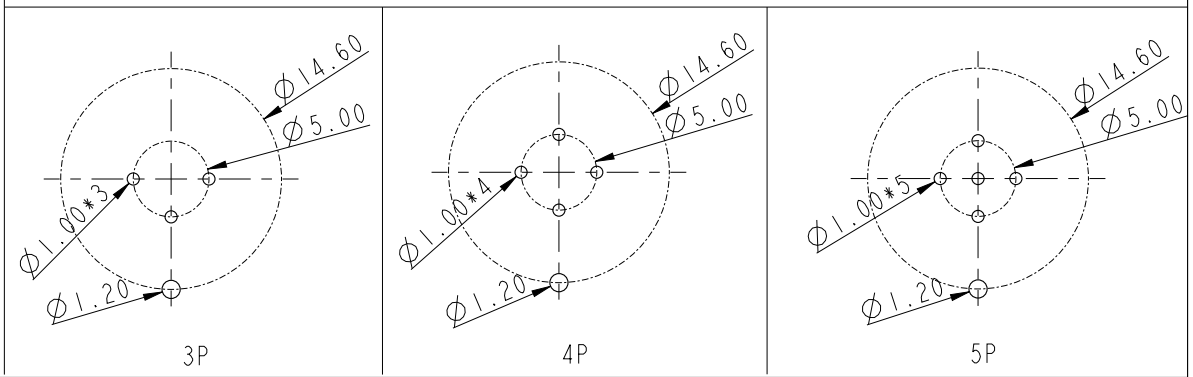

C

UNIT: mm

TOLERANCE
.X ±0.25
.XX ±0.1
.XXX ±0.05
ANGLES ±1°

TITLE: N SEN, M12 B -SHLD, SCREW RECEPTACLE, F, F, PCB S E

SCALE 3:2	SIZE A4	SHEET 2 OF 2
REV. H	WC-REV. A.4	QC: Inspection item

Amphenol LTW
安費諾亮泰企業股份有限公司

ITEM NO	DRAWN BY Henry	DATE 2024-10-30
DWG NO D MSBS-XXPFFP-SF8001	CHECKED BY Jerry	DATE 2024-10-30
CUSTOMER ALTW	APPROVED BY Fred	DATE 2024-10-30

WI0814-03-RM01A2