REV.	ECN NO.	DATE	SIGN	DESCRIPTION
C	C201548	2020/10/12	Vicky	C X2
D	C210561	2021/04/19	Vicky	D X2
E	C221877	2022/12/13	Ruru	E X1

C MSDP-XXBMMA-SR7001

XX: No. Of Pin

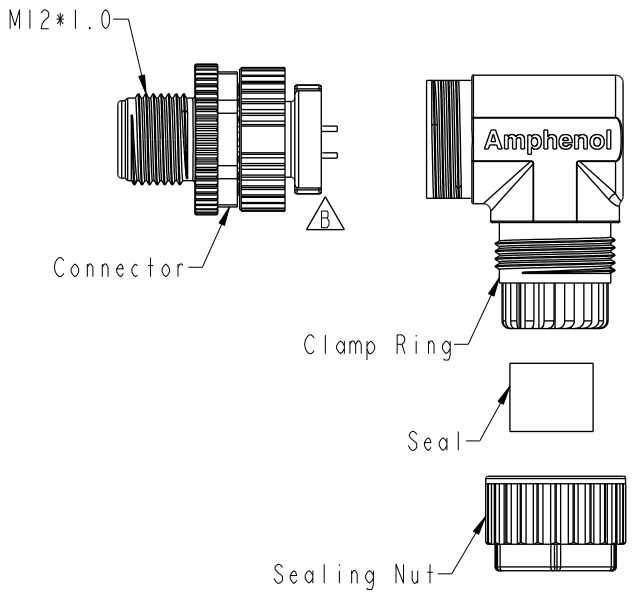

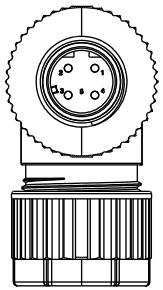

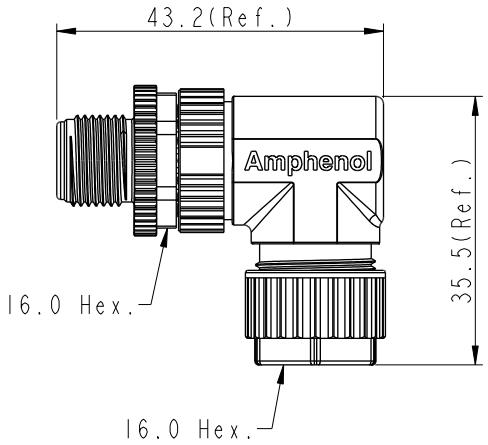

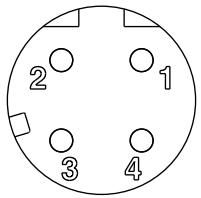

4P

Pin Assignments
Front View

D
Note:
* RoHS Compliant
* QC Important Dimension
E * Waterproof rate: IP67, mated
* Connector
  Housing: Thermoplastic, Black
  Pin: Copper alloy, Gold plated
  Extension Nut: Thermoplastic, Black
  Nut: Thermoplastic, Black
  O-Ring: Rubber, Gray
* Clamp Ring: Thermoplastic, Black
* Sealing Nut: Thermoplastic, Black
* Seal: Rubber, Gray, OD:∅4.0mm~∅7.0mm
* One set unassembled in one pe bag

UNIT:mm

TOLERANCE
.X ±0.25
.XX ±0.1
.XXX ±0.05
ANGLES ±1°

TITLE: N SEN, M12 D -PLASTIC, SCREW CABLE W/O SR, M, M, FI SOLDER D

SCALE 1:1 | SIZE A4 | SHEET 1 OF 1

REV. E | WC-REV. A.5 | QC: Inspection item

Amphenol LTW
安費諾亮泰企業股份有限公司

ITEM NO	DRAWN BY: JC Chen	DATE: 2020-04-17
DWG NO: C MSDP-XXBMMA-SR7001	CHECKED BY: Li Feng	DATE: 2020-04-17
CUSTOMER: ALTW	APPROVED BY: Jerry	DATE: 2020-04-17

W10814-03-[redacted]01A2

THIS DOCUMENT IS SUBJECT TO CHANGE WITHOUT NOTICE. IT IS CONFIDENTIAL AND A PROPERTY OF Amphenol LTW. DISCLOSURE TO THIRD PARTY HAS TO BE AUTHORIZED BY Amphenol LTW.