REV.	ECN NO.	DATE	SIGN	DESCRIPTION
C	C210084	2021/01/18	Vicky	(C) X3
D	C210561	2021/04/19	Vicky	(D) X2
E	C221877	2022/12/13	Ruru	(E) X1

(B) MSDS-XXBFFA-SR7001

XX: No. Of Pin

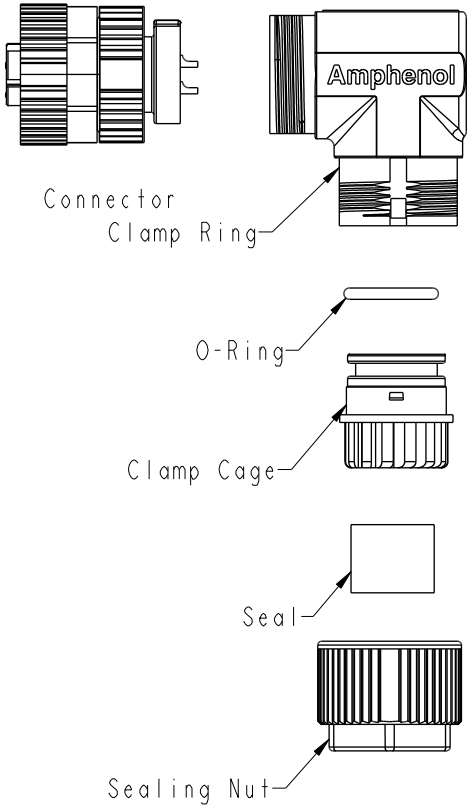

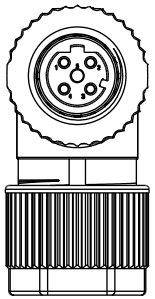

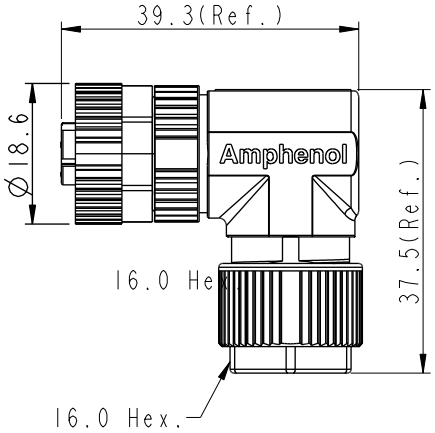

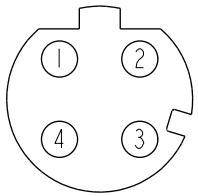

5P

Pin Assignments
Front View

(D)
Note:
* RoHS Compliant
* (QC) Important Dimension
(E) * Waterproof rate: IP67, mated
* Connector
  Housing: Thermoplastic, Black
  Pin: Copper alloy, Gold plated
  Extension Nut: Metal
(C) Nut: Metal
  O-Ring: Rubber, Gray
(C) * Clamp Ring: Metal
* O-Ring: Rubber, Gray
* Clamp Cage: Thermoplastic, Black
(C) * Sealing Nut: Metal
* Seal: Rubber, Gray, OD:Ø4.0mm~Ø7.5mm
* One set unassembled in one pe bag

UNIT: mm

TOLERANCE
.X ±0.25
.XX ±0.1
.XXX ±0.05
ANGLES ±1°

TITLE: N SEN, M12 D -SHLD, SCREW CABLE W/O SR, F, F, FI SOLDER (D)			
SCALE 1:1	SIZE A4	SHEET 1 OF 1	
REV. E	WC-REV. A.5	(QC): Inspection item	

Amphenol LTW
安費諾亮泰企業股份有限公司

ITEM NO	DRAWN BY JC Chen	DATE 2020-04-18
DWG NO (B) MSDS-XXBFFA-SR7001	CHECKED BY Li Feng	DATE 2020-04-18
CUSTOMER ALTW	APPROVED BY Jerry	DATE 2020-04-18

WI0814-03-RW01A2

THIS DOCUMENT IS SUBJECT TO CHANGE WITHOUT NOTICE. IT IS CONFIDENTIAL AND A PROPERTY OF Amphenol LTW. DISCLOSURE TO THIRD PARTY HAS TO BE AUTHORIZED BY Amphenol LTW.