REV.	ECN NO.	DATE	SIGN	DESCRIPTION
E	C210561	2021/04/19	Vicky	E X3
F	C210977	2021/06/23	Vicky	F X1
G	C221877	2022/12/13	Ruru	G X1

C MSDS-XXBFFC-SL7001

XX: No. Of Pin

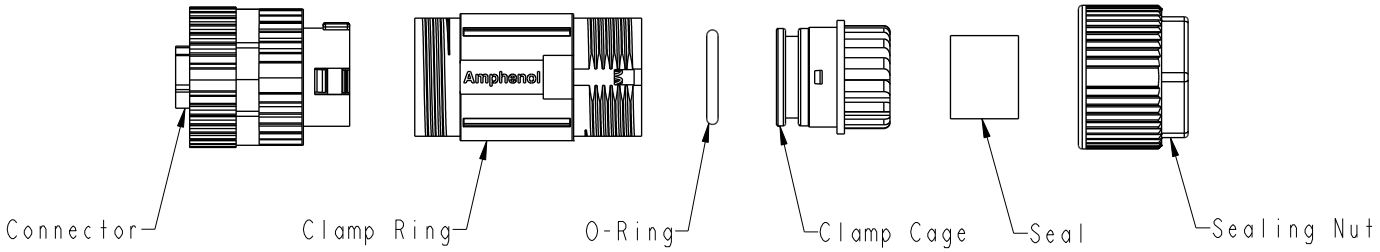

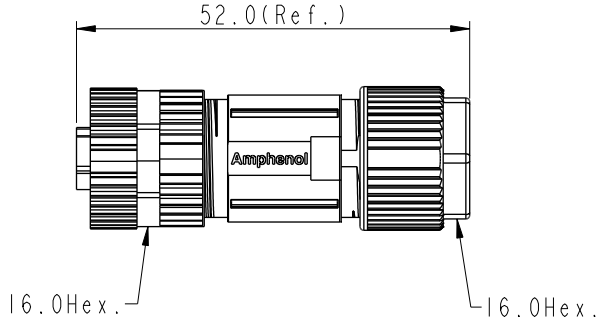

C E

Note:

* RoHS Compliant
* QC Important Dimension
G * Waterproof rate: IP67, mated
* Connector
  Housing: Thermoplastic, Black
  Pin: Copper alloy, Gold plated
  Extension Nut: Metal
  Nut: Metal
  O-Ring: Rubber, Gray
D * Clamp Ring: Metal
* O-Ring: Rubber, Gray
* Clamp Cage: Thermoplastic, Black
D * Sealing Nut: Metal
* Seal: Rubber, Gray, OD:∅4.0mm~∅7.5mm
F * Applicable wire gauge: 20AWG~24AWG
* One set unassembled in one pe bag

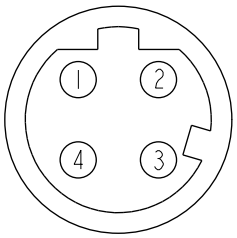

4P

Pin Assignments
Front View

PE Bag

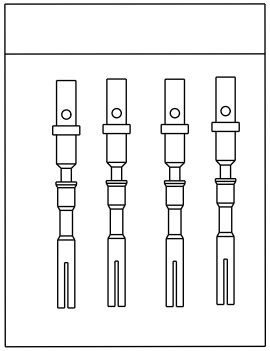

UNIT:mm

TOLERANCE
.X ±0.25
.XX ±0.1
.XXX ±0.05
ANGLES ±1°

E

TITLE: N SEN, M12 D -SHLD, SCREW CABLE W/O SR, F, F, FI/PANEL CRIMP (C E)			
SCALE 1:2	SIZE A4	SHEET 1 OF 1	
REV. G	WC-REV. .0	QC: Inspection item	

Amphenol LTW

安費諾亮泰企業股份有限公司

ITEM NO	DRAWN BY Xiaofeng	DATE 2019/08/09
DWG NO C MSDS-XXBFFC-SL7001	CHECKED BY Li-Feng	DATE 2019/08/09
CUSTOMER ALTW	APPROVED BY Jerry	DATE 2019/08/09

WI0814-03-RW01A2

THIS DOCUMENT IS SUBJECT TO CHANGE WITHOUT NOTICE. IT IS CONFIDENTIAL AND A PROPERTY OF Amphenol LTW. DISCLOSURE TO THIRD PARTY HAS TO BE AUTHORIZED BY Amphenol LTW.