REV.	ECN NO.	DATE	SIGN	DESCRIPTION
E	C210561	2021/04/19	Vicky	E X3
F	C210977	2021/06/23	Vicky	F X1
G	C221877	2022/12/13	Ruru	G X1

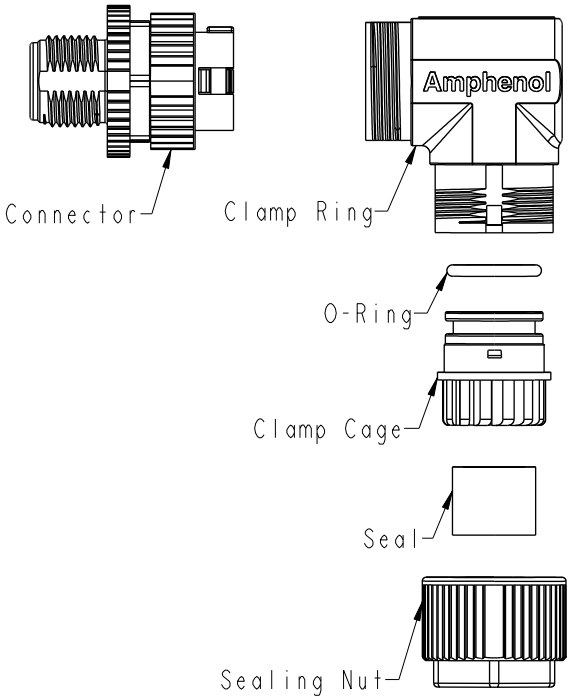

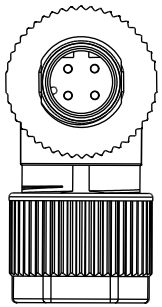

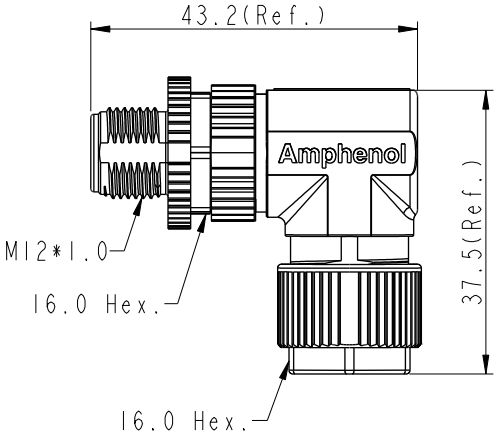

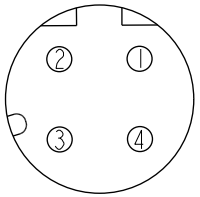

4P

Pin Assignments
Front View

PE Bag

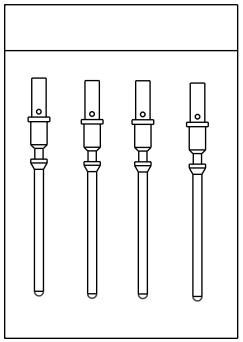

C MSDS-XXBMMC-SR7001

XX: No. Of Pin

D E
Note:
* RoHS Compliant
* QC Important Dimension
G * Waterproof rate: IP67, mated
* Connector
  Housing: Thermoplastic, Black
  Pin: Copper alloy, Gold plated
  Extension Nut: Metal
  Nut: Metal
  O-Ring: Rubber, Gray
D * Clamp Ring: Metal
* O-Ring: Rubber, Gray
* Clamp Cage: Thermoplastic, Black
D * Sealing Nut: Metal
B * Seal: Rubber, Gray, OD:∅4.0mm~∅7.0mm
F * Applicable wire gauge: 20AWG~24AWG
* One set unassembled in one pe bag

UNIT: mm

TOLERANCE
.X ±0.25
.XX ±0.1
.XXX ±0.05
ANGLES ±1°

E

TITLE: N SEN, M12 D -SHLD, SCREW CABLE W/O SR, M, M, F1/PANEL CRIMP C E

SCALE: Free | SIZE: A4 | SHEET 1 OF 1

REV. G | WC-REV. .0 | QC: Inspection item

Amphenol LTW
安費諾亮泰企業股份有限公司

ITEM NO	DRAWN BY: Xiaofeng	DATE: 2019/08/09
DWG NO: C MSDS-XXBMMC-SR7001	CHECKED BY: Li-Feng	DATE: 2019/08/09
CUSTOMER: ALTW	APPROVED BY: Jerry	DATE: 2019/08/09

W10814-03-[redacted]01A2

THIS DOCUMENT IS SUBJECT TO CHANGE WITHOUT NOTICE. IT IS CONFIDENTIAL AND A PROPERTY OF Amphenol LTW. DISCLOSURE TO THIRD PARTY HAS TO BE AUTHORIZED BY Amphenol LTW.