REV.	ECN NO.	DATE	SIGN	DESCRIPTION
B	C221973	2022-12-26	Ruru	B X1
C	C230815	2023-06-30	Jiahe Lin	C X3
D	C230927	2023-07-20	Jiahe Lin	D X1

MSDS-XXPFFP-SH7002

XX: No. Of Pin

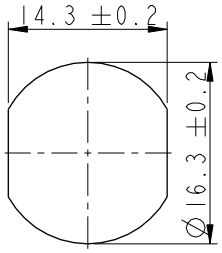

Recommended panel Cut-Out

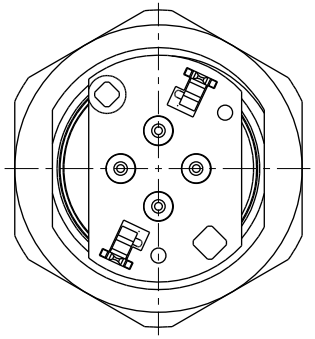

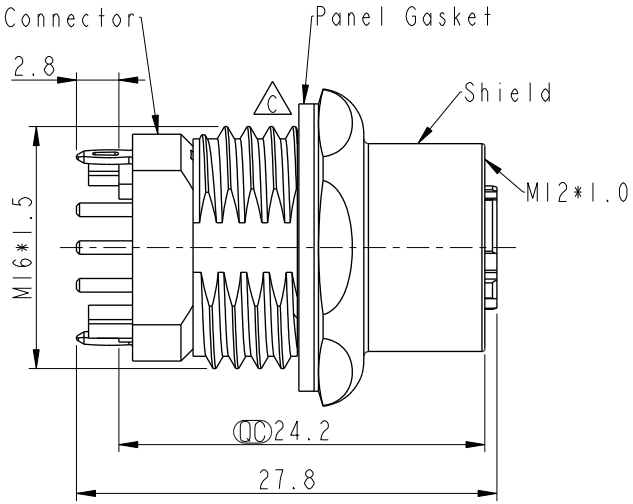

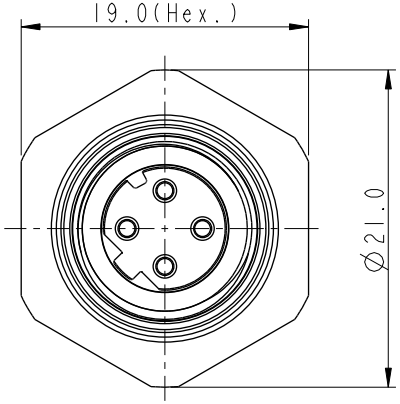

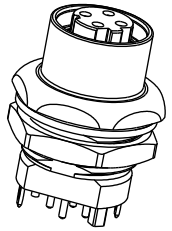

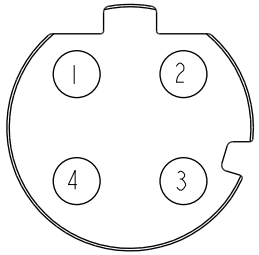

4P

Pin Assignment Front View

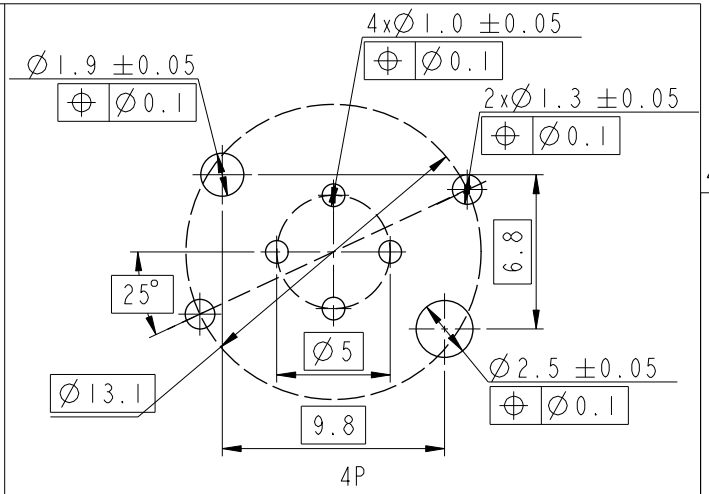

4P

PCB Layout

C

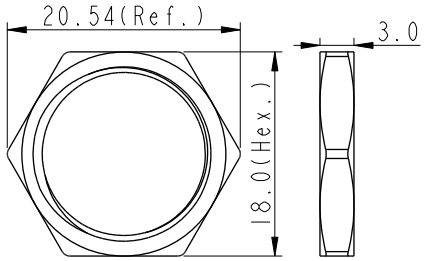

Nut is packed separately in PE bag

Note:
* RoHS Compliant
* QC Important dimension
* B Waterproof rate: IP67, Mated
* Connector
  Housing: Thermoplastic, Black
  Pin: Copper alloy, Gold plated
  Spring: Metal
* Shield: Metal
* Nut: Metal
* Panel Gasket: Rubber, Black
* Mating Gakset: Rubber, Black
* For Panel Thickness max: 2.5mm
* For PCB Thickness max:2.5mm
* Nut is packed separately in PE bag

UNIT: mm

TOLERANCE
.X ±0.25
.XX ±0.1
.XXX ±0.05
ANGLES ±1°

TITLE: N SEN, M12 D -SHLD, RECEPTACLE, F, F, PCB S

SCALE: 2:1 | SIZE: A4 | SHEET 1 OF 1 | D

REV. D | WC-REV. A.1 | QC: Inspection item

Amphenol LTW
安費諾亮泰企業股份有限公司

ITEM NO	DRAWN BY: Jiahe Lin	DATE: 2022-08-18
DWG NO: MSDS-XXPFFP-SH7002	CHECKED BY: Allen Pan	DATE: 2022-08-18
CUSTOMER: ALTW	APPROVED BY: Fred Lee	DATE: 2022-08-18

WI0814-03-[redacted]01A2

THIS DOCUMENT IS SUBJECT TO CHANGE WITHOUT NOTICE. IT IS CONFIDENTIAL AND A PROPERTY OF Amphenol LTW. DISCLOSURE TO THIRD PARTY HAS TO BE AUTHORIZED BY Amphenol LTW.