REV.	ECN NO.	DATE	SIGN	DESCRIPTION
A		2024/03/19	Yunchen	Rev.03 to Rev.A
B	C241212	2024/11/4	Zed	B X3

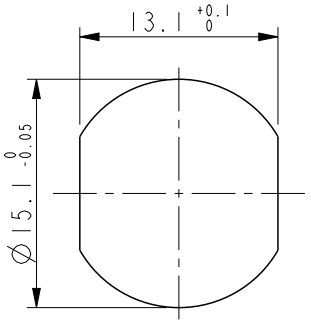

Recommended Panel Cut-Out

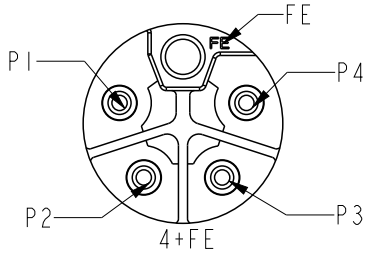

Pin Assignment Front View

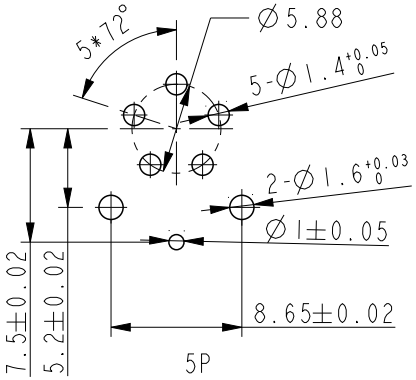

Recommended PCB. Layout

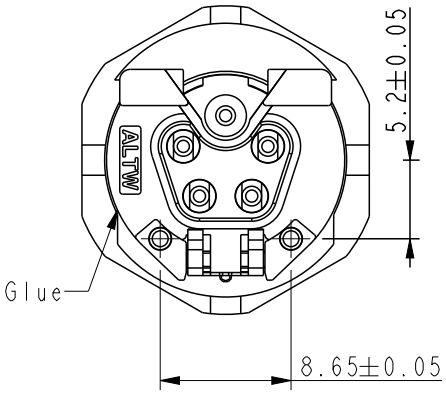

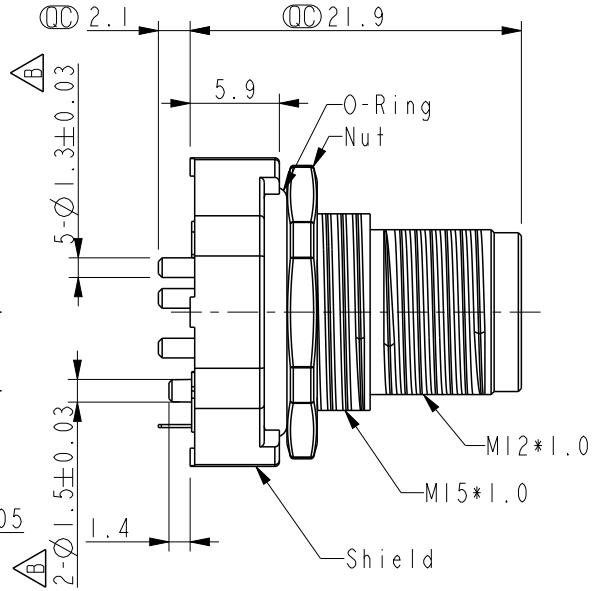

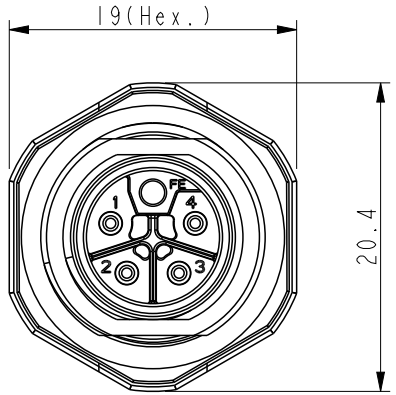

MSLS-XXPMEP-SF8004

XX: No. of Pin

Note:
* RoHS Compliant
* QC Important dimension
* Waterproof rate: IP68, unmated 1m/24h
  IP69K mated B
* Connector
  Housing: Thermoplastic, Black
  Pin: Copper alloy, Gold plated
  Spring: Metal
  O-Ring: Rubber, Black
* Shield: Metal
* Nut: Metal
* O-Ring: Rubber, Gray
* For panel thickness max: 4.0mm
* For pcb thickness: 1.6mm
* Nut is packed separately in PE bag

UNIT: mm

TOLERANCE
.X ±0.25
.XX ±0.1
.XXX ±0.05
ANGLES ±1°

TITLE: N SEN, M12 L-SHLD, 05P, SCREW RECEPTACLE, M, M+F G, PCB S			
SCALE: 2:1	SIZE: A4	SHEET: 1 OF 1	
REV.: A	WC-REV.: A.1	QC: Inspection item	

Amphenol LTW
安費諾亮泰企業股份有限公司

ITEM NO	DRAWN BY: Zed	DATE: 2024/11/4
DWG NO: MSLS-XXPMEP-SF8004	CHECKED BY: Aric	DATE: 2024/11/4
CUSTOMER: ALTW	APPROVED BY: Fred	DATE: 2024/11/4

THIS DOCUMENT IS SUBJECT TO CHANGE WITHOUT NOTICE. IT IS CONFIDENTIAL AND A PROPERTY OF Amphenol LTW. DISCLOSURE TO THIRD PARTY HAS TO BE AUTHORIZED BY Amphenol LTW.