No.of Contact	Cable OD(mm)	Item No.
4P	8.2	MSSP-04BMMM-SR8GXX
3P	7.5	MSSP-03BMMM-SR8GXX

B C

REV.	ECN NO.	DATE	SIGN	DESCRIPTION
B	C211619	2021/12/16	Li Dai	B X1
C	C221810	2022/12/07	Li Dai	C X4
D	C221992	2022/12/23	Ruru	D X2

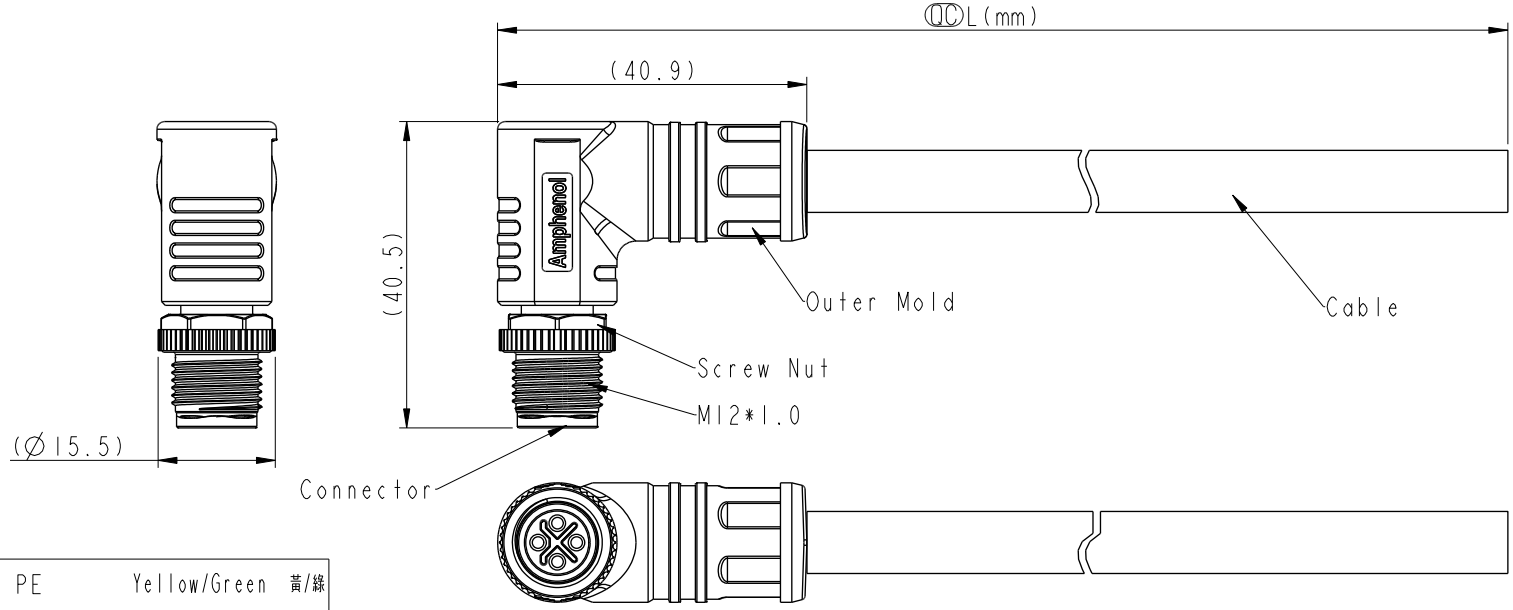

Pin #	Wire		Pin #	Wire	
PE	Yellow/Green	黃/綠	PE	Yellow/Green	黃/綠
3	Blue	藍	3	Blue	藍
			2	White	白
1	Brown	棕	1	Brown	棕

Pin Out

2+PE

3+PE

Pin Assignments Front View

MSSP-XXBMMM-SR8GXX C

XX: 01~99 Meters
01: 01 Meter
02: 02 Meters
.
.
99: 99 Meters

No. of Pin

Notes:
* QC Important Dimension to Check.
D * Waterproof rate: IP68, mated 1m/24h
IP69K, mated
* Connector: Thermoplastic, Black.
* Male Pin: Copper Alloy, Gold Plated.
* Screw Nut: Thermopastic,Black.
C * Cable UL2586, 16AWG, PVC Jacket, Black.
* Cable Length Tolerance: 01M:+50/-0mm
>02M~03M:+100/-0mm
>03M~05M:+150/-0mm
>05M~10M:±100mm
>10M~20M:±200mm
>20M~30M:±300mm
>30M~99M:±500mm

UNIT:mm

TOLERANCE ±0.5mm

TITLE: N SEN, M12 S -PLASTIC, SCREW CABLE W/O SR, M, M, MOLDING D

SCALE 1:1 | SIZE A4 | SHEET 1 OF 1

REV. D | WC-REV. .0 | QC:Inspection item

Amphenol LTW
安費諾亮泰企業股份有限公司

ITEM NO	DRAWN BY Li Dai	DATE 2021-10-04
DWG NO MSSP-XXBMMM-SR8GXX C	CHECKED BY Fisher Wang	DATE 2021-10-04
CUSTOMER ALTW	APPROVED BY Max Yang	DATE 2021-10-04

W10814-03-RW01A2

THIS DOCUMENT IS SUBJECT TO CHANGE WITHOUT NOTICE. IT IS CONFIDENTIAL AND A PROPERTY OF Amphenol LTW. DISCLOSURE TO THIRD PARTY HAS TO BE AUTHORIZED BY Amphenol LTW.