REV.	ECN NO.	DATE	SIGN	DESCRIPTION
A		2012/11/29	Tao-Cheng	Change Rev.01 To Rev.A
B	LEN17A0055	2017-10-09	Lingpeng	Modify The Dimensions And Tolerances

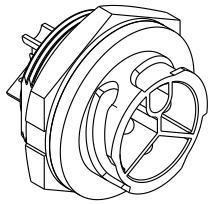

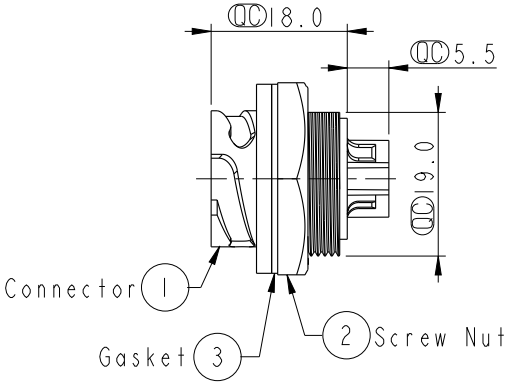

ALTW
CONFIDENTIAL
2017-10-09
R&D DEPT.

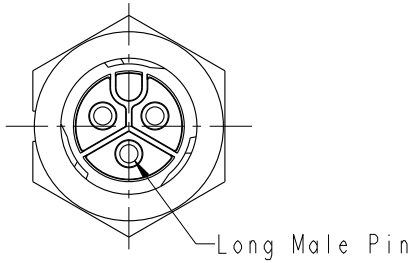

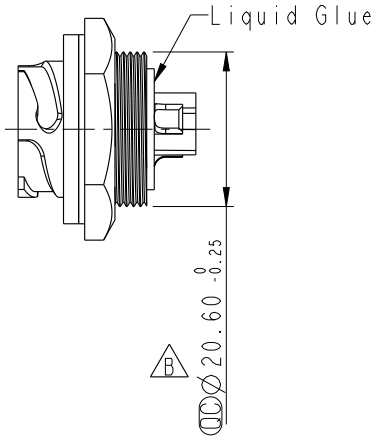

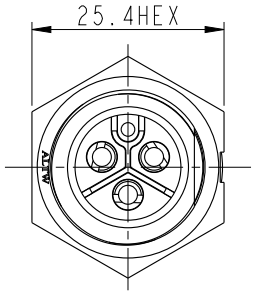

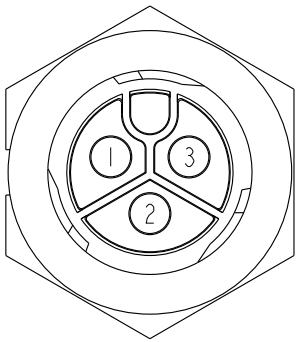

Pin Assignment
Front View

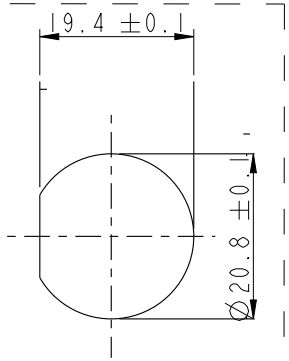

Recommended
Panel Cut-Out

ALTW
DCC. DEPT.
CONFIDENTIAL
2017.10.12
ISSUED

Note:
* QC Important Dimension To Check
* Waterproof Rate: IP67 (Mated)
* Connector: Nylon+GF, Black
* Male Pin: Brass, Gold Flash
* Screw Nut: Nylon+GF, Black
* Gasket: Silicone, Gray
* Maximum Panel Thickness: 4.5mm

UNIT: mm

TOLERANCE
.X ±0.25
.XX ±0.1
.XXX ±0.05
ANGLES ±1°

TITLE: Power Panel 3Key 3Pin M Conn M Pin 20Amps

SCALE	SIZE	SHEET
1:1	A4	1 OF 1
REV. B	WC-REV. A.4	QC: Inspection item

Amphenol LTW
安費諾亮泰企業股份有限公司

ITEM NO	DRAWN BY	DATE
PWC-03RMMS-TC7001	Lingpeng	2017-10-09
DWG NO: PWC-03RMMS-TC7001	CHECKED BY: Mafei	DATE: 2017-10-09
CUSTOMER: ALTW	APPROVED BY: Jerry	DATE: 2017-10-09

W10814-03-RM01A1

THIS DOCUMENT IS SUBJECT TO CHANGE WITHOUT NOTICE. IT IS CONFIDENTIAL AND A PROPERTY OF Amphenol LTW. DISCLOSURE TO THIRD PARTY HAS TO BE AUTHORIZED BY Amphenol LTW.