REV.	ECN NO.	DATE	SIGN	DESCRIPTION
B	C230541	2023/04/25	Haotian	(B) X4
C	C240590	2024/05/28	Vicky	(C) X4

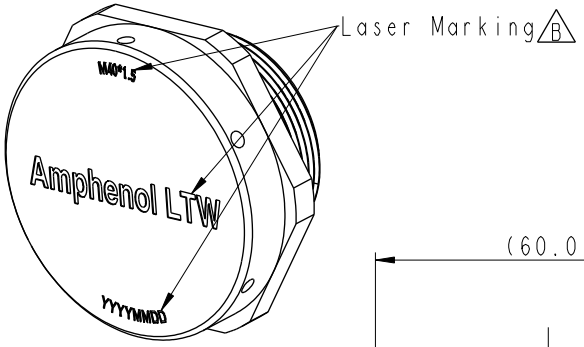

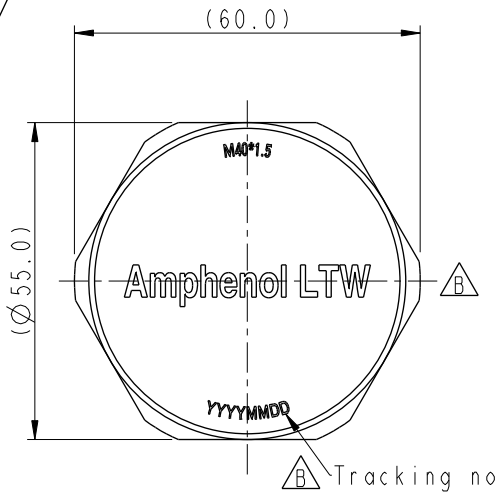

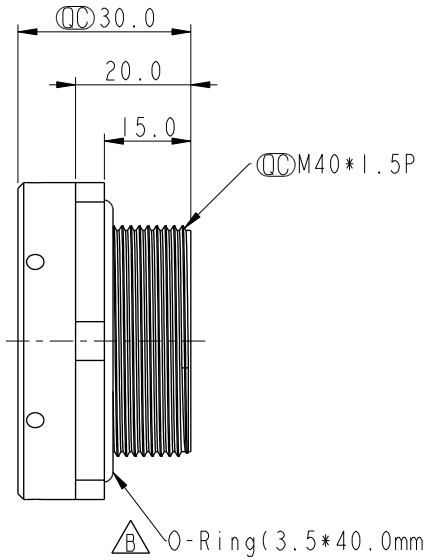

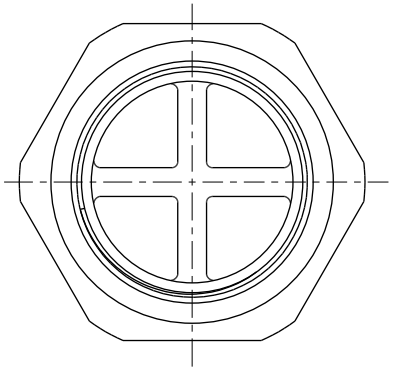

VENT-MS5NME-08001

S5: M40*1.5

ME: Metallic

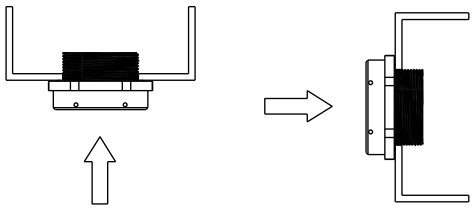

Recommended installation orientation

建議安裝朝向

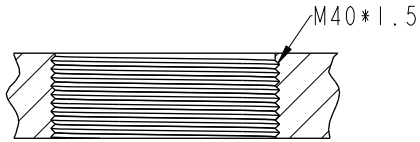

Recommended Panel Cut-Out

建議開孔尺寸

Note:
* (QC) Important Dimension.
* Waterproof Rate: IP68(2m/1h), IP69K
* Body: Aluminum Alloy, Anodizing
* Cap: Aluminum Alloy, Anodizing
* Membrane: ePTFE
* O-Ring: Silicone, UL94V-0
* (C) Air Permeability: >4500ml/min at 7 kPa
* (C) Opening Pressure: 40±5 kPa
* (C) Recommended Torque: 35.7~56 kgf.cm

UNIT: mm

TOLERANCE
.X ±0.25
.XX ±0.1
.XXX ±0.05
ANGLES ±1°

TITLE	VENT, M40, ME 4500ML/MIN, SR (C)		
SCALE 3:4	SIZE A4	SHEET 1 OF 1	
REV. C	WC-REV. .0	(QC): Inspection item	

Amphenol LTW

安費諾亮泰企業股份有限公司

ITEM NO VENT-MS5NME-08001	DRAWN BY Vicky	DATE 2024-05-28
DWG NO VENT-MS5NME-08001	CHECKED BY Rita	DATE 2024-05-28
CUSTOMER ALTW	APPROVED BY Fred	DATE 2024-05-28

WI0814-03-[illegible]01A2

THIS DOCUMENT IS SUBJECT TO CHANGE WITHOUT NOTICE. IT IS CONFIDENTIAL AND A PROPERTY OF Amphenol LTW. DISCLOSURE TO THIRD PARTY HAS TO BE AUTHORIZED BY Amphenol LTW.