REV.	ECN NO.	DATE	SIGN	DESCRIPTION
C	C190403	2019/03/13	Vicky	Change Note
D	C220628	2022/05/12	Vicky	D X4
E	C230186	2023/02/13	Vicky	E X1

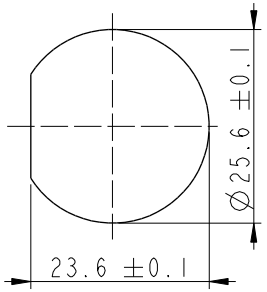

Recommended Panel Cut-Out

D DD-XXRMMS-QC8001

XX: No. Of Pin

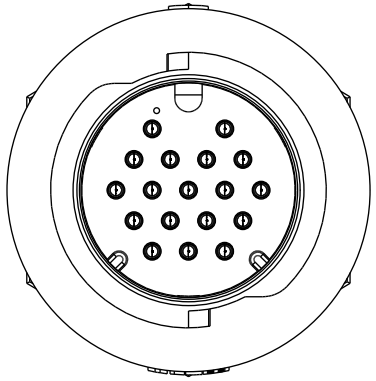

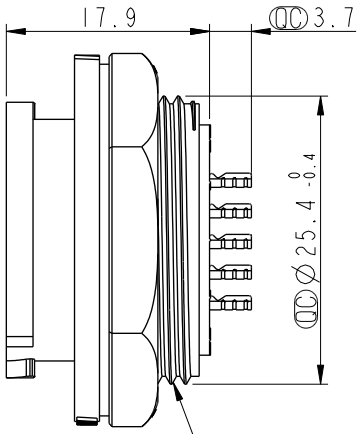

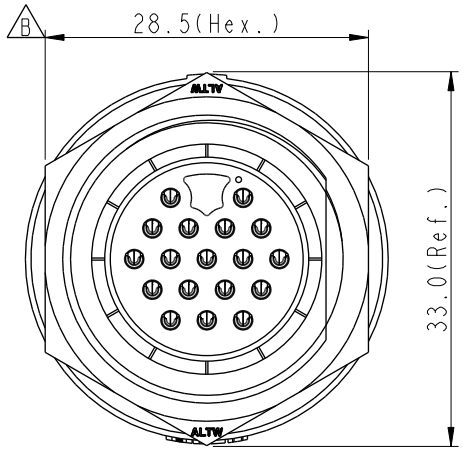

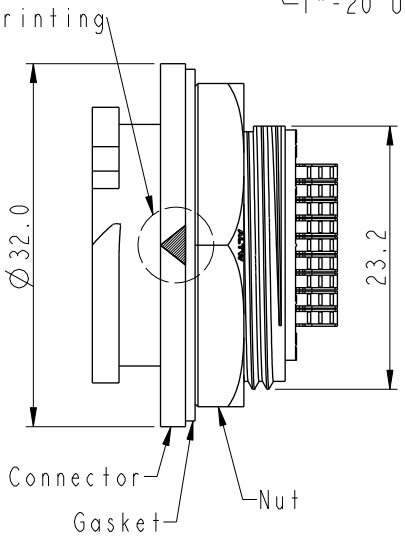

C D

Note:
* RoHS Compliant
* QC Important dimension
E * Waterproof rate: IP68, unmated 1m/24h
* Connector
  Housing: Thermoplastic, Black
  Pin: Copper Alloy, Gold plated
* Nut: Thermoplastic, Black
* Gasket: Rubber, Gray
* For panel thickness max: 3.6mm
* Gasket and nut are packed separately in pe bag

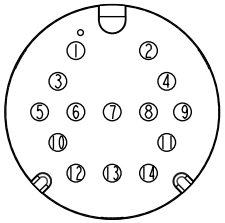

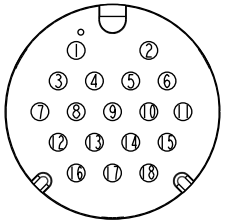

Pin Assignments Front View

UNIT: mm

TOLERANCE
.X ±0.25
.XX ±0.1
.XXX ±0.05
ANGLES ±1°

TITLE: XLOK, D-5A, REAR FASTENED M, M, SOLDER, PUSH LOCK D

SCALE 3:2 | SIZE A4 | SHEET 1 OF 1

REV. E | WC-REV. A.2 | QC: Inspection item

Amphenol LTW
安費諾亮泰企業股份有限公司

ITEM NO	DRAWN BY: Vicky	DATE: 2019-03-13
DWG NO: D DD-XXRMMS-QC8001	CHECKED BY: Rita	DATE: 2019-03-13
CUSTOMER: ALTW	APPROVED BY: Max	DATE: 2019-03-13

WI0814-03-RW01A2

THIS DOCUMENT IS SUBJECT TO CHANGE WITHOUT NOTICE. IT IS CONFIDENTIAL AND A PROPERTY OF Amphenol LTW. DISCLOSURE TO THIRD PARTY HAS TO BE AUTHORIZED BY Amphenol LTW.